Annu. Rev. Microbiol. 2021.75:19-47. Downloaded from www.annualreviews.org
Access provided by 42.2.127.201 on 10/26/21. For personal use only.

ANNUAL REVIEWS

Annual Review of Microbiology

Similarities and Dissimilarities of COVID-19 and Other Coronavirus Diseases

To Sing Fung and Ding Xiang Liu

Guangdong Province Key Laboratory of Microbial Signals and Disease Control and Integrative Microbiology Research Centre, South China Agricultural University, Guangzhou 510642, China; email: dxliu0001@163.com

Annu. Rev. Microbiol. 2021. 75:19–47

First published as a Review in Advance on January 25, 2021

The *Annual Review of Microbiology* is online at micro.annualreviews.org

https://doi.org/10.1146/annurev-micro-110520-023212

Copyright © 2021 by Annual Reviews.
All rights reserved

ANNUAL REVIEWS CONNECT

www.annualreviews.org

- Download figures
- Navigate cited references
- Keyword search
- Explore related articles
- Share via email or social media

Keywords

coronavirus infections, SARS-CoV-2, COVID-19, immunopathogenesis, innate immune response, virus-host interaction, prevention, treatment strategies

Abstract

In less than two decades, three deadly zoonotic coronaviruses, severe acute respiratory syndrome coronavirus (SARS-CoV), Middle East respiratory syndrome coronavirus (MERS-CoV), and SARS-CoV-2, have emerged in humans, causing SARS, MERS, and coronavirus disease 2019 (COVID-19), respectively. The current COVID-19 pandemic poses an unprecedented crisis in health care and social and economic development. It reinforces the cruel fact that CoVs are constantly evolving, possessing the genetic malleability to become highly pathogenic in humans. In this review, we start with an overview of CoV diseases and the molecular virology of CoVs, focusing on similarities and differences between SARS-CoV-2 and its highly pathogenic as well as low-pathogenic counterparts. We then discuss mechanisms underlying pathogenesis and virus-host interactions of SARS-CoV-2 and other CoVs, emphasizing the host immune response. Finally, we summarize strategies adopted for the prevention and treatment of CoV diseases and discuss approaches to develop effective antivirals and vaccines.

Annu. Rev. Microbiol. 2021.75:19-47. Downloaded from www.annualreviews.org
Access provided by 42.2.127.201 on 10/26/21. For personal use only.

Contents

INTRODUCTION 20
COVID-19 AND OTHER CORONAVIRUS DISEASES 21
Diseases Caused by Human Coronaviruses 21
Diseases Caused by Animal Coronaviruses 22
MOLECULAR VIROLOGY OF SARS-CoV-2 AND OTHER CORONAVIRUSES 22
Classification and Evolution 22
Morphology and Genomic Structure 23
Proteins Encoded by Coronaviruses 23
Replication Cycles 26
MOLECULAR FEATURES OF COVID-19 AND OTHER CORONAVIRUS INFECTIONS 29
Cell and Tissue Tropism 29
Transmission 29
Immunopathogenesis 30
IMMUNE RESPONSE IN COVID-19 AND OTHER CORONAVIRUS DISEASES 32
Innate Immunity 32
Adaptive Immune Response 34
CORONAVIRUS-HOST INTERACTION 35
Programmed Cell Death 35
Cellular Stress Response 36
DIAGNOSIS, TREATMENT, AND PREVENTION 37
Diagnosis 37
Antivirals 37
Other Therapeutic Interventions 38
Vaccines 38
CONCLUSION 39

INTRODUCTION

The ongoing pandemic of coronavirus disease 2019 (COVID-19), caused by severe acute respiratory syndrome coronavirus 2 (SARS-CoV-2), is the most devastating outbreak since the H1N1 influenza in 1918. Although the origin of SARS-CoV-2 is still debated, it was a pneumonia outbreak of unknown etiology in Wuhan, China, at the end of 2019 that first caught the attention of health authorities and the general public. SARS-CoV-2 was identified as the causative agent, and its genome sequence was shortly released (151, 164). As cases increased outside China, the World Health Organization declared COVID-19 a global pandemic on March 11, 2020. As of October 15, 2020, there have been over 38 million confirmed COVID-19 cases and over 1 million deaths reported worldwide. With vaccines in development, the control of COVID-19 mainly relies on physical distancing of the general public, reinforced by the use of facial masks; contact tracing of the exposed population; and quarantine of confirmed patients.

Although the impact of COVID-19 is unprecedented, this is not the first time that a zoonotic CoV has caused outbreaks in humans: SARS and Middle East respiratory syndrome (MERS),

caused by SARS-CoV and MERS-CoV, respectively, resulted in significant mortality and global panic. Animal CoVs are also important veterinary pathogens, and recent outbreaks of (re)emerging virulent variants have caused severe economic losses. Here, we review major CoVs and the diseases they cause, focusing on similarities and differences in their molecular virology and pathogenesis. The various mechanisms adopted by CoVs to interact with host cells and to antagonize the innate immune response are also discussed, followed by a summary of CoV antivirals and vaccines under development.

COVID-19 AND OTHER CORONAVIRUS DISEASES

Diseases Caused by Human Coronaviruses

Seven human CoVs (HCoVs) have been identified. These include the three highly pathogenic CoVs, SARS-CoV, SARS-CoV-2, and MERS-CoV, and four CoVs with low pathogenicity, human coronavirus 229E (HCoV-229E), HCoV-OC43, HCoV-NL63, and HCoV-HKU1.

Annu. Rev. Microbiol. 2021.75:19-47. Downloaded from www.annualreviews.org
Access provided by 42.2.127.201 on 10/26/21. For personal use only.

SARS and MERS. The 2002–2004 SARS outbreak was first reported in Guangdong, China, and spread to other countries. The epidemic ended with 8,096 confirmed cases and a case mortality rate of ~9.6% (38). SARS patients showed flu-like symptoms that progressed to pneumonia and dyspnea, and in severe cases they developed life-threatening acute respiratory distress syndrome (ARDS) (106).

Since the first MERS epidemic, in the Middle East in 2012, two major outbreaks have occurred, in South Korea (2015) and Saudi Arabia (2018), with intermittent, sporadic cases. As of January 15, 2020, there were 2,506 confirmed cases of MERS, with a very high case mortality rate of ~34%. In addition to SARS-like symptoms, MERS is characterized by more frequent development of ARDS and multiorgan failure, particularly in patients older than 65 years and those with comorbidities (109).

COVID-19. Clinical manifestations of COVID-19 are similar to those of SARS, with common symptoms including fever, cough, sore throat, and dyspnea. However, the clinical spectrum of COVID-19 is much broader, with ~80–90% of patients having only mild illness and ~20% requiring hospitalization (108). The case mortality rate of COVID-19 is lower than that of SARS, though it varies widely in different countries (109). The disease severity of COVID-19, similar to that of SARS, increases significantly with age (108). For example, the case mortality rate of COVID-19 in Italy as of March 17, 2020, was less than 1% in people younger than 60 years, but it was ~10–20% in people older than 70 years (102). Importantly, COVID-19 is much more transmissible than SARS, partly due to the following three factors. First, the incubation period is 4–12 days for SARS-CoV-2, longer than the 2–7 days for SARS-CoV (108). Also, a high viral load of SARS-CoV-2 is detected at the onset of symptoms and rapidly declines in the following week, whereas the viral load of SARS-CoV peaks 1–2 weeks after symptom onset (108). Thus, case isolation and contact tracing are more challenging for COVID-19. Second, a large proportion of SARS-CoV-2-infected individuals are asymptomatic, are presymptomatic, or have mild illness, but they may still transmit the virus; however, SARS-CoV caused severe disease that generally required hospitalization (108). Finally, viral shedding may also persist longer for SARS-CoV-2 compared with SARS-CoV (108).

Diseases caused by other human coronaviruses. HCoV-229E, HCoV-NL63, HCoV-OC43, and HCoV-HKU1 are so-called low-pathogenic HCoVs that cause mild upper respiratory tract illness and contribute to 15–30% of common colds in human adults. However, in infants, elderly

people, and immunocompromised individuals, these low-pathogenic HCoVs sometimes cause life-threatening bronchiolitis and pneumonia (84a). Distributed globally, these four HCoVs cause epidemics every two to three years, particularly in the winter (84a). Infection does not induce long-lasting protective immunity, so people can be infected repeatedly.

Diseases Caused by Animal Coronaviruses

Animal coronaviruses are important pathogens of many domesticated and laboratory animal species. Mouse hepatitis virus (MHV) is present in mouse colonies worldwide (97). MHV infection of laboratory mice affects host physiology and compromises their value as research subjects (97). In contrast, fulminant hepatitis and chronic demyelination caused by MHV-3 and MHV-JHM, respectively, have served as useful models for human diseases (49).

Six porcine CoVs are known to cause diseases. Among them, transmissible gastroenteritis virus (TGEV) causes diarrhea mainly in young piglets (71), whereas porcine epidemic diarrhea virus, porcine deltacoronavirus (PDCoV), and swine acute diarrhea syndrome coronavirus are emerging swine CoVs with high mortality rates in neonatal piglets (142).

Infectious bronchitis virus (IBV) is a highly contagious CoV that causes acute respiratory disease that is particularly severe in young chicks, and nephropathogenic variants are emerging (84b). Two biotypes of CoV that infect cats exist: Feline enteric coronavirus (FECV) causes subclinical disease, and feline infectious peritonitis virus (FIPV) has systemic and lethal outcomes (105). **Table 1** summarizes some human and animal CoVs and the diseases they cause.

MOLECULAR VIROLOGY OF SARS-CoV-2 AND OTHER CORONAVIRUSES

The basic genomic structure and replication cycle of SARS-CoV-2 are similar to those of other CoVs, and the main functions of their structural and nonstructural proteins are also conserved. Although SARS-CoV-2 uses the same receptor as SARS-CoV, differences in the major virion surface protein, the spike (S) glycoprotein, alter its binding affinity and cleavage by host proteases.

Classification and Evolution

CoVs belong to the subfamily *Orthocoronavirinae*, family *Coronaviridae*, and order *Nidovirales*. This subfamily is divided into four genera: *Alphacoronavirus*, *Betacoronavirus*, *Gammacoronavirus*, and *Deltacoronavirus*, each containing multiple subgenera. It is widely believed that bats are reservoirs for alpha- and betacoronaviruses, whereas wild birds are reservoirs for gamma- and deltacoronaviruses (25, 147). SARS-CoV presumably emerged by recombination of SARS-related CoVs that are prevalent in bats, transmission to the intermediate host palm civet, and finally spillover to humans (57, 80). MERS-CoV also originated in bats and uses dromedaries as intermediate hosts (38).

The closest known relative to SARS-CoV-2 is a bat CoV named RaTG13 that shares 96.2% genome sequence identity with SARS-CoV-2 (164). However, only one of the six amino acids in the S protein that are critical for ACE2 binding is conserved between RaTG13 and SARS-CoV-2 (164). With its direct progenitor(s) and intermediate host(s) unidentified, the origin of SARS-CoV-2 remains elusive.

In the near future, additional mutations that facilitate viral transmission (similar to D614G in the S protein) will likely emerge, and the widespread administration of vaccines may also affect the evolutionary trajectory of SARS-CoV-2. Notably, a recent study showed that SARS-CoV-2 was introduced by humans to minks and transmitted back to humans, highlighting the risk of similar animals becoming reservoirs of SARS-CoV-2 (103).

Annu. Rev. Microbiol. 2021.75:19-47. Downloaded from www.annualreviews.org
Access provided by 42.2.127.201 on 10/26/21. For personal use only.

Table 1 Coronavirus diseases in humans and animals

Host	Coronavirus (genus)	Disease(s)	References
Human	SARS-CoV-2 (β)	COVID-19	151, 164
	SARS-CoV (β)	Severe acute respiratory syndrome	106
	MERS-CoV (β)	Middle East respiratory syndrome	109
	HCoV-229E (α)	Common cold	38
	HCoV-NL63 (α)	Common cold	38
	HCoV-OC43 (β)	Common cold	38
	HCoV-HKU1 (β)	Common cold	38
Pig	TGEV (α)	Gastroenteritis	71
	PRCoV (α)	Mild respiratory disease	142
	PHEV (β)	Vomiting and wasting disease, encephalomyelitis	142
	PEDV (α)	Gastroenteritis	142
	PDCoV (δ)	Gastroenteritis	142
	SADS-CoV (β)	Gastroenteritis	142
Mouse	MHV (β)	Diarrhea, hepatitis, encephalitis	49, 97
Rat	SDAV (β)	Sialodacryoadenitis, mild pneumonia	39
	RCoV-P (β)	Fatal pneumonia	39
Horse	ECoV (β)	Mild gastrointestinal disease	45
Cattle	BCoV (β)	Enteritis, respiratory disease, pneumonia	45
Cat	FIPV (α)	Peritonitis, pyogranuloma	105
	FECV (α)	Subclinical enteric disease	105
Dog	CCoV (α)	Enteritis	45
	CRCoV (β)	Mild to severe respiratory disease, pneumonia	45
Chicken	IBV (γ)	Bronchitis, nephritis	84b

Abbreviations: α, *Alphacoronavirus*; BCoV, bovine coronavirus; β, *Betacoronavirus*; CCoV, canine coronavirus; COVID-19, coronavirus disease 2019; CRCoV, canine respiratory coronavirus; δ, *Deltacoronavirus*; ECoV, equine coronavirus; FECV, feline enteric coronavirus; FIPV, feline infectious peritonitis virus; γ, *Gammacoronavirus*; HCoV, human coronavirus; IBV, infectious bronchitis virus; MERS-CoV, Middle East respiratory syndrome coronavirus; MHV, mouse hepatitis virus; PDCoV, porcine deltacoronavirus; PEDV, porcine epidemic diarrhea virus; PHEV, porcine hemagglutinating encephalomyelitis virus; PRCoV, porcine respiratory coronavirus; RCoV-P, Parker rat coronavirus; SADS-CoV, swine acute diarrhea syndrome coronavirus; SARS-CoV, severe acute respiratory syndrome coronavirus; SDAV, sialodacryoadenitis virus; TGEV, transmissible gastroenteritis virus.

Annu. Rev. Microbiol. 2021.75:19-47. Downloaded from www.annualreviews.org
Access provided by 42.2.127.201 on 10/26/21. For personal use only.

Morphology and Genomic Structure

CoVs are enveloped viruses, spherical or pleomorphic, with a diameter of 80–150 nm. The virion surface contains the eponymous crown-like (*corona* is Latin for crown) projections constituted by the S protein. The CoV genome is packaged inside the envelope as a helically symmetric nucleocapsid. CoVs are positive-sense, single-stranded RNA viruses with nonsegmented genomes of 27–32 kilobases (**Figure 1**). The genomic RNA is modified by 5′-capping and 3′-polyadenylation, flanked by untranslated regions on both ends. The preceding 70–75% of the genome comprises the replicase-encoding open reading frame 1a (*ORF1a*) and *ORF1b*, while the remaining region contains ORFs that encode structural and accessory proteins.

Proteins Encoded by Coronaviruses

CoVs encode a number of structural, nonstructural, and accessory proteins. The biochemical and structural features as well as the functions of these proteins in CoV replication, pathogenesis, and host interactions are briefly summarized below.

Annu. Rev. Microbiol. 2021.75:19-47. Downloaded from www.annualreviews.org
Access provided by 42.2.127.201 on 10/26/21. For personal use only.

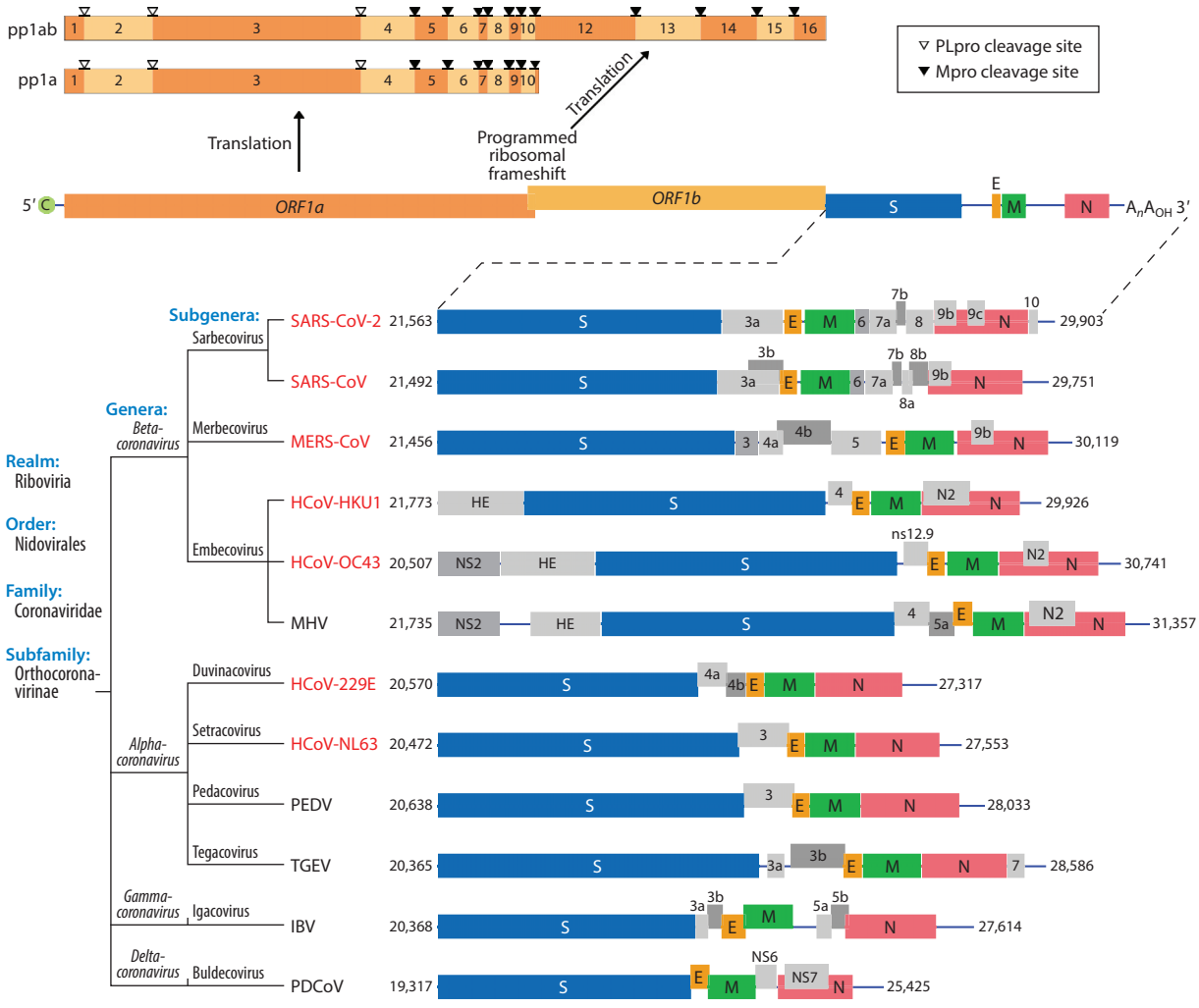

Figure 1

Genomic structures and taxonomy of selected CoVs. The generic CoV genome is shown with a 5′-cap structure and a 3′-polyadenylated tail (A_nA_{OH} 3′). *ORF1a* is translated to produce pp1a, whereas a programmed ribosomal frameshift allows translation to continue on *ORF1b*, producing pp1ab. Both pp1a and pp1ab are proteolytically processed by PLpro and Mpro, producing nsp1 to nsp16. The 3′ genomic regions of seven HCoVs (*red*) and five animal CoVs (*black*) were compared, with their taxonomic relationships shown on the left and the genome lengths (bp) on the right. The S, E, M, and N genes are in blue, orange, green, and red, respectively, whereas the HE gene and other accessory genes are in gray or dark gray. RNA lengths drawn to scale. Abbreviations: CoV, coronavirus; E, envelope; 5′ C, 5′-cap; HCoV, human CoV; HE, hemagglutinin-esterase; IBV, infectious bronchitis virus; M, membrane; MERS, Middle East respiratory syndrome; MHV, mouse hepatitis virus; Mpro, main protease; N, nucleocapsid; nsp1, nonstructural protein 1; *ORF1a*, open reading frame 1a; PDCoV, porcine deltacoronavirus; PEDV, porcine epidemic diarrhea virus; PLpro, papain-like protease; pp1a, polyprotein 1a; S, spike; SARS, severe acute respiratory syndrome; TGEV, transmissible gastroenteritis virus.

Structural proteins. CoVs encode four structural proteins: S, membrane (M), envelope (E), and nucleocapsid (N) proteins (**Figure 2**). Some accessory proteins, such as the hemagglutinin-esterase of MHV, HCoV-HKU1, and HCoV-OC43 and ORF3a, 6, 7a, 7b, and 9b of SARS-CoV, are also incorporated into mature virions (84).

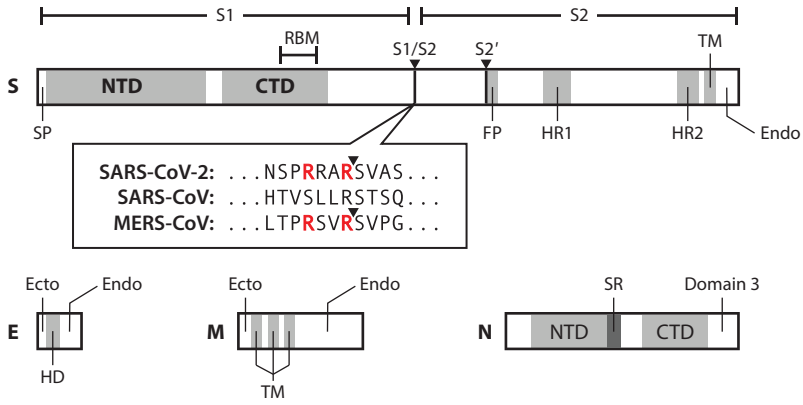

Figure 2

Topologies and domains of CoV structural proteins. Amino acid sequences flanking the S1/S2 sites of SARS-CoV-2, SARS-CoV, and MERS-CoV are shown. The arginines in the furin cleavage motifs of SARS-CoV-2 and MERS-CoV are in red. Protein lengths drawn to scale. Abbreviations: CoV, coronavirus; CTD, C-terminal domain; E, envelope; ecto, ectodomain; endo, endodomain; FP, fusion peptide; HD, hydrophobic domain; HR1, heptad repeat 1; M, membrane; MERS, Middle East respiratory syndrome; N, nucleocapsid; NTD, N-terminal domain; RBM, receptor-binding motif; S, spike; SARS, severe acute respiratory syndrome; SP, signal peptide; SR, serine-arginine rich region; TM, transmembrane domain.

Annu. Rev. Microbiol. 2021.75:19-47. Downloaded from www.annualreviews.org
Access provided by 42.2.127.201 on 10/26/21. For personal use only.

The S glycoprotein (150–200 kDa) is a trimeric transmembrane protein with a predominant ectodomain and a short cytosolic tail. It is cleaved by host proteases into two subunits. The S1 subunit is divided into an N-terminal domain (S1-NTD) and a C-terminal domain (S1-CTD). In general, receptor-binding motifs (RBMs) are located in S1-CTD for CoVs that use protein receptors and in S1-NTD for CoVs using sugar receptors (76). The S2 subunit contains the fusion peptide, which is preceded by a secondary protease cleavage site (S2′) in some CoVs.

The M glycoprotein (23–35 kDa) contains a short ectodomain, three transmembrane domains (TMDs), and a C-terminal endodomain. The M protein is the most abundant virion protein and plays an essential role during assembly (96). M-M monomer interactions occur among the TMDs, whereas M-M dimer, M-S, and M-N contacts are governed by the M endodomain (69).

The E protein (8–12 kDa) is a minor virion component, and the pentameric bundling of its TMD forms an ion channel (IC). Deletion of the E gene in SARS-CoV is not lethal, but virions are severely crippled and attenuated in vivo (38). The virulence of SARS-CoV with IC-inactivating mutations in the E protein is reduced in vivo, whereas similar IBV mutants are defective in virion release (79).

The N protein (43–50 kDa) has three domains: The NTD and CTD are rich in basic residues that interact with the genome, while domain 3 interacts with the M protein (69). The N protein is recruited to the replication-transcription complexes (RTCs) (23), and its phosphorylation modulates template read-through during genome transcription and RNA binding affinity during packaging (37).

Notwithstanding the highly variable S1 subunit, the S2 subunit and the M, E, and N proteins are relatively conserved in terms of structures and functions, although small variations are observed among different CoVs. For example, the ectodomain of the M protein is N-linked glycosylated in most CoVs but O-linked glycosylated in some betacoronaviruses such as MHV and HCoV-OC43 (37). Also, a PDZ-binding motif (PBM) in the C terminus of the E protein is present in some CoVs (like SARS-CoV and SARS-CoV-2) but absent in others (38).

Nonstructural proteins. Encoded by *ORF1a* and *ORF1b*, polyprotein 1a (pp1a) and pp1ab are autoproteolytically cleaved to form 15–16 nonstructural proteins (nsps). Among them, the papain-like protease (PLpro) activity of nsp3, the main protease (Mpro) activity of nsp5, and the RNA-dependent RNA polymerase (RDRP) activities of nsp12 are at the core of CoV replication.

The multidomain protein nsp3 has various enzymatic activities (74). Besides the PLpro releasing nsp1–nsp3 from the polyproteins, nsp3 also possesses deubiquitination (DUB) activity and de-ISGylation activity that target ubiquitin and ISG15 (interferon-stimulated gene 15), respectively. The macrodomain of nsp3 catalyzes the removal of covalently attached ADP-ribose from protein targets. These activities contribute to CoV virulence by antagonizing the innate immune response (33, 99).

Monomeric nsp5 is inactive when it is released from the polyproteins. Homodimerization of nsp5 forms the active Mpro, which cleaves all 11 downstream sites to release nsp6–nsp16 (152). Recently, the catalytic mechanism for SARS-CoV Mpro and MERS-CoV Mpro was reported (141), and the structure of SARS-CoV-2 Mpro has also been resolved (60).

At the core of CoV RNA-synthesizing machinery, nsp12 interacts with nsp7 and the primase nsp8 to form a polymerase complex, likely also joined by the helicase nsp13, the exoribonuclease (ExoN) nsp14, and other viral and host proteins. The structures of SARS-CoV-2 nsp12 and the nsp12-nsp7-nsp8 complex have been resolved, demonstrating a novel β-hairpin domain at the nsp12 N terminus (40) and significant conformational changes that accommodate the nucleic acids (143).

The main functions of nsps are highly conserved among CoVs, but some variations are observed. For example, a nonconserved region is present in the nsp3 of SARS-CoV, SARS-CoV-2, and presumably other SARS-related CoVs (74). This eponymous SARS-unique domain (SUD) binds to G-quadruplex sequences present in the genomes of all HCoVs (74). The SUD of SARS-CoV also interacts with and stabilizes an E3 ubiquitin ligase, thereby promoting p53 degradation to facilitate viral replication (90).

Accessory proteins. CoV accessory proteins are generally considered dispensable for viral replication in vitro, but some of them are involved in viral pathogenesis (84). It was recently shown that ORF3a and ORF8b of SARS-CoV induce proinflammatory cytokines and regulate the chemotaxis of macrophages (124, 160). ORF8b of MERS-CoV and SARS-CoV also suppresses the induction of type I interferons (IFN-I) (149, 150). In general, there are no homologous accessory proteins among CoV genera, but similar ones may exist in closely related CoVs. For example, ORF3a, 6, 7a, 7b, and 9b all have over 80% sequence similarities between SARS-CoV and SARS-CoV-2 (164).

Replication Cycles

The CoV replication cycle has already been reviewed (38). Here we highlight the similarities and dissimilarities between SARS-CoV-2 and other CoVs (**Figure 3**).

Attachment and entry. Binding of the S protein to its cognate receptor initiates the CoV replication cycle. Some CoVs use cell surface peptidases as receptors, such as angiotensin-converting enzyme 2 (ACE2) for SARS-CoV and SARS-CoV-2, dipeptidyl peptidase 4 for MERS-CoV, and aminopeptidase N (APN) for HCoV-229E. Other CoVs use sugar receptors like sialic acid, while TGEV S protein binds to both APN and sialic acid (76). Notably, compared with the receptor-binding domain (RBD) of SARS-CoV, the RBD of SARS-CoV-2 has greater ACE2 binding affinity but is less exposed (121). Also, the SARS-CoV-2 S protein has been undergoing mutations, and

Annu. Rev. Microbiol. 2021.75:19-47. Downloaded from www.annualreviews.org
Access provided by 42.2.127.201 on 10/26/21. For personal use only.

the natural mutation D614G increases viral infectivity (78). N-linked glycosylation also modulates its binding to ACE2 and neutralizing antibodies (78).

Besides receptor binding, the CoV S protein also requires host proteolytic activation at the S1/S2 and S2′ cleavage sites. Host proteases that cleave S protein include cell surface proteases, lysosomal proteases, proprotein convertases, and extracellular proteases (76). Among them, furin is a proprotein convertase that cleaves a multibasic motif. Notably, whereas the SARS-CoV-2 S

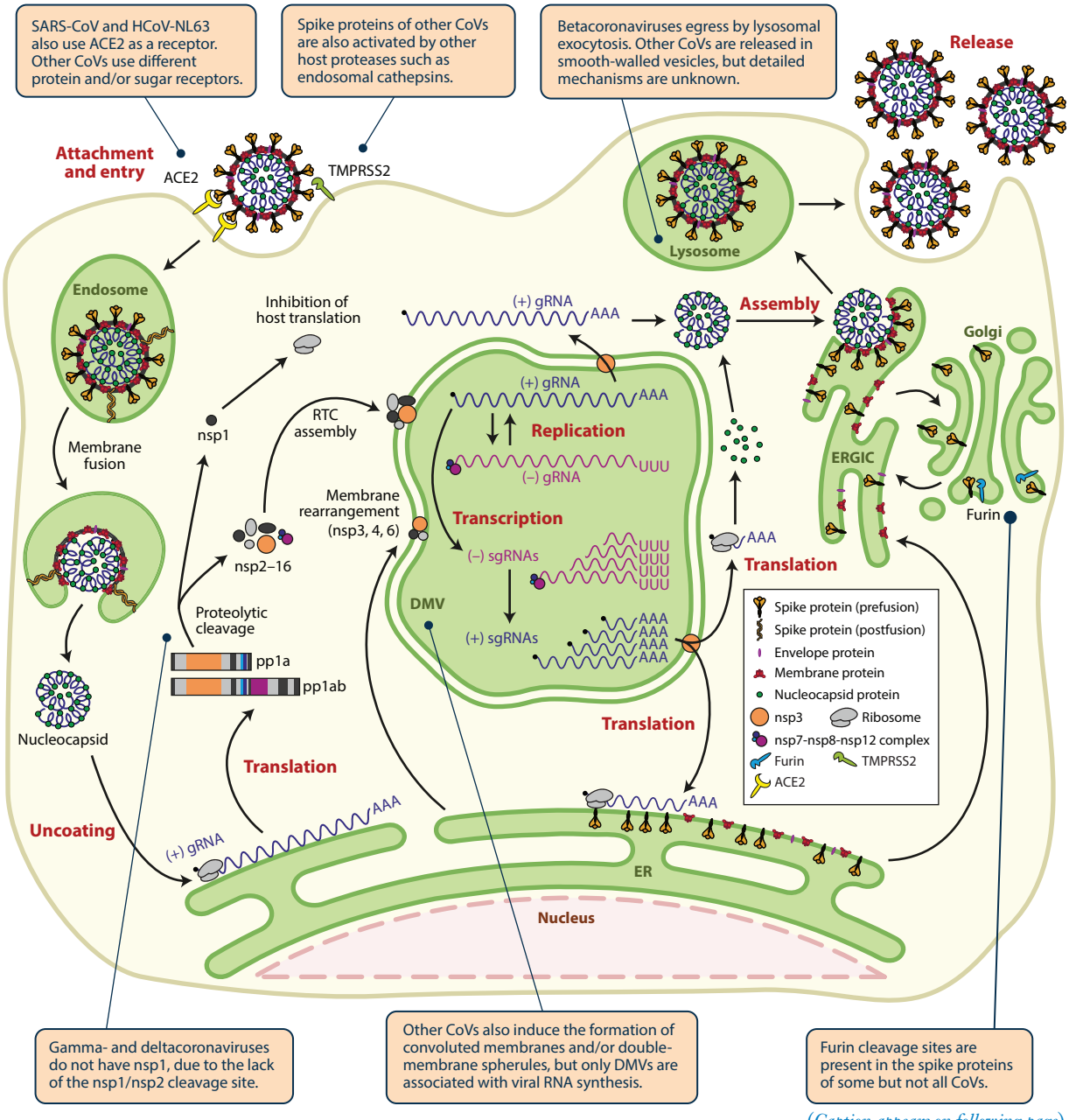

(Caption appears on following page)

Annu. Rev. Microbiol. 2021.75:19-47. Downloaded from www.annualreviews.org
Access provided by 42.2.127.201 on 10/26/21. For personal use only.

Figure 3 (*Figure appears on preceding page*)

Schematic diagram showing the replication cycle of SARS-CoV-2. Variations in the replication cycle of other CoVs are indicated in orange boxes. The SARS-CoV-2 S protein binds to the receptor ACE2 and is activated by TMPRSS2. Endocytosis is induced, and membrane fusion in the endosome is followed by the release and uncoating of the nucleocapsid. The gRNA is translated into pp1a and pp1ab, which are cleaved to form nsps. The nsps induce rearrangement of ER to form DMVs, where the viral RTCs are assembled. Full-length gRNA and a nested set of sgRNA species are synthesized inside the DMVs and exported via molecular pores constituted by nsp3. The sgRNAs are translated into structural and accessory proteins. Virion assembly occurs in the ERGIC, and mature virions are released via lysosomal exocytosis. Abbreviations: ACE2, angiotensin-converting enzyme 2; CoV, coronavirus; DMV, double-membrane vesicle; ER, endoplasmic reticulum; ERGIC, ER-Golgi intermediate complex; gRNA, genomic RNA; HCoV, human CoV; nsp, nonstructural protein; pp1a, polyprotein 1a; RTC, replication transcription complex; S, spike; SARS, severe acute respiratory syndrome; sgRNA, subgenomic RNA; TMPRSS2, transmembrane protease serine 2.

Annu. Rev. Microbiol. 2021.75:19-47. Downloaded from www.annualreviews.org
Access provided by 42.2.127.201 on 10/26/21. For personal use only.

protein is cleaved by furin at the S1/S2 site, such a furin cleavage site is absent in the SARS-CoV S protein (51) (**Figure 2**). Because furin is ubiquitously expressed in all tissues, its cleavage of the SARS-CoV-2 S protein potentially contributes to the expanded tissue tropism and enhanced transmissibility. Apart from furin, SARS-CoV-2 is also cleaved by the cell surface transmembrane protease serine 2 (TMPRSS2) shortly after ACE2 binding (52).

Receptor binding and protease activation trigger conformational changes in the S2 subunit, and membrane fusion occurs similarly as membrane fusion of other class I viral fusion proteins. CoV typically enters in late endosomes and is internalized via clathrin-dependent, caveolar, or other endocytic pathways (38).

RNA and protein synthesis. After internalization, *ORF1a* is translated into pp1a, while a programmed ribosomal frameshift enables the synthesis of pp1ab. As stated above, pp1a and pp1ab are processed by PLpro and Mpro to generate nsps that assemble to form the RTC. Associated only with double-membrane vesicles and not with other virus-induced structures, newly synthesized CoV genomic RNA is exported out of the double-membrane vesicle through pores formed of nsp3 and associates with the N protein in the cytosol (130, 148).

Apart from replicating the full-length genomic RNA, CoV replicase also synthesizes a nested set of subgenomic RNAs (sgRNAs) by switching between templates at the transcription-regulated sequences. In addition to the canonical sgRNAs, SARS-CoV-2 produces transcripts encoding unknown ORFs with fusion, deletion, and frameshifting, and viral transcripts undergo various RNA modifications, pointing to the highly complex transcriptome and epitranscriptome of SARS-CoV-2, which may also be shared by other CoVs (64).

CoV structural and accessory proteins are translated from sgRNAs in the cytoplasm. By promoting the degradation and inhibiting the translation of host mRNAs, betacoronavirus nsp1 suppresses host gene expression and acts as a major virulence factor (95). Recent structural analysis revealed that SARS-CoV-2 nsp1 binds to and obstructs the ribosomal mRNA entry tunnel (137). Notably, due to the lack of nsp1/nsp2 cleavage sites, gammacoronaviruses and deltacoronaviruses do not produce nsp1, although similar host shutoff is induced by other less characterized mechanisms.

Assembly and release. CoV genome packaging has been best characterized for MHV, and information is lacking for other CoVs. A 95-nucleotide stem-loop within nsp15 serves as the packaging signal for MHV and other lineage A betacoronaviruses (5). This packaging signal is recognized by the second RNA-binding domain of the N protein (70). Interestingly, mutation of the MHV packaging signal does not affect genomic RNA packaging and viral titers, but it does result in large increases in sgRNA packaging and attenuation in vivo (5).

The packaged nucleocapsid joins with the structural proteins in the endoplasmic reticulum (ER)-Golgi intermediate compartment, and the M protein orchestrates assembly and morphogenesis of CoV particles. A recent study has shown that betacoronaviruses including SARS-CoV-2 egress by lysosomal exocytosis, instead of the biosynthetic secretory pathway (41). Other CoVs are released in smooth-walled vesicles, but the detailed mechanism is not yet fully characterized.

MOLECULAR FEATURES OF COVID-19 AND OTHER CORONAVIRUS INFECTIONS

CoVs have specific host and tissue tropisms mainly determined by the S proteins. SARS-CoV-2 has expanded tissue tropism compared with SARS-CoV, and its transmissibility is enhanced partially due to the large proportion of infected individuals with mild or no symptoms. The immunopathogenesis of severe COVID-19 is similar to that of SARS and MERS, which involves excessive cytokine release.

Cell and Tissue Tropism

The CoV S protein, along with its receptor and/or activating proteases, is the major determinant of tissue tropism. CoVs typically infect epithelial cells lining the respiratory tract and/or gastrointestinal tract, but they can also disseminate to various tissues and organs. For example, while the lungs are the most affected organs, autopsies after death of COVID-19 patients also identify SARS-CoV-2 in the pharynx, heart, liver, brain, and kidneys (111). The expanded tissue tropism and zoonotic transmission of SARS-CoV-2 compared with SARS-CoV may be partially explained by the higher ACE2 binding affinity of SARS-CoV-2 RBDs and the additional furin cleavage site at S1/S2. Furthermore, ACE2 and TMPRSS2 expression levels are highest in the nose and decrease along the lower respiratory tract, parallel with the greater infectivity of SARS-CoV-2 in upper versus lower respiratory tract epithelial cells (55).

Specific binding to the receptor(s) by the S protein is also the main determinant of CoV cell tropism. Overexpression of a CoV receptor in nonpermissive cells often renders permissiveness to the corresponding CoV, while mutations in the S protein (especially the RBD) are frequently associated with changes in host tropism. For example, the RBM of SARS-CoV strains isolated from human patients differs by only two amino acids from that of strains isolated from palm civets, yet the mutations significantly increase the affinity for human ACE2 (81). Another interesting example is porcine respiratory CoV (PRCoV), which arose from a TGEV variant with a large deletion in the S protein that abolishes its sialic acid–binding activity. As a result, PRCoV cannot attach to mucin-type glycoproteins and initiate infection in the gut, thereby switching to respiratory tropism (72). Also, when the ectodomain of the MHV S protein is replaced with that of FIPV, the recombinant virus acquires the ability to infect feline cells and simultaneously loses the ability to infect murine cells in vitro (68). Mutations in the S protein are also implicated in the switch of the enterotropic FECV to the severe FIPV with tropism for monocytes or macrophages (105).

Transmission

HCoVs, including SARS-CoV-2, are primarily transmitted via respiratory droplets generated by coughing and sneezing (132). Oral fluid droplets generated by normal speaking may also contribute to transmission (132). Accumulating evidence also suggests that SARS-CoV-2 is airborne and can be transmitted by aerosols in the exhaled air (85). Other potential routes for SARS-CoV-2 transmission include contact with contaminated surfaces (fomites) and fecal-oral transmission (29). Importantly, asymptomatic transmission of SARS-CoV-2 has been reported among

Annu. Rev. Microbiol. 2021.75:19-47. Downloaded from www.annualreviews.org
Access provided by 42.2.127.201 on 10/26/21. For personal use only.

US Marine Corps recruits during quarantine (75), suggesting that asymptomatic individuals may participate in one or more of the above routes of transmission. In addition, cats, dogs, and ferrets are permissive to SARS-CoV-2 (125, 128), and the potential roles of these domesticated animals in the spread of COVID-19 are being investigated.

The basic reproductive rate (R_0) is defined as the average number of secondary transmissions from one infected individual, assuming that there is no preexisting immunity in the community. The R_0 for SARS-CoV-2 is 1.8–3.6, comparable with 2.0–3.0 for SARS-CoV (108). However, SARS-CoV-2 infection is asymptomatic or causes mild disease in most people, and the infectiousness of people with SARS-CoV-2 peaks at or before symptom onset, making it impossible to contain the pandemic through case isolation alone (50). With an R_0 value of ~0.69 and limited transmissibility, MERS has not caused sustained epidemics (108), whereas R_0 values of 1.7–2.2 are estimated for HCoV-OC43 and HCoV-HKU1 in a recent study (66). Animal CoVs that cause respiratory diseases are typically transmitted by respiratory discharges and/or aerosols, whereas those causing gastrointestinal diseases are typically transmitted via the fecal-oral route; but both may also be spread by contaminated feed, water, or fomites.

Immunopathogenesis

The immunopathogenesis of COVID-19 resembles that of SARS and MERS (**Figure 4**). The infection of airway epithelial cells, dendritic cells (DCs), and macrophages, along with the induction of pyroptosis, leads to the release of pathogen- and damage-associated molecular patterns (PAMPs and DAMPs) and the secretion of proinflammatory cytokines and chemokines (136). In most cases, the recruited monocytes and T lymphocytes clear the infection, and the infected individual has no symptoms or recovers after mild disease. However, in some patients, especially those over 60 years old and those with comorbidities, dysregulated immune responses lead to widespread pneumonitis, which is characterized by diffuse alveolar damage, desquamation of alveolar cells, hyaline membrane formation, and pulmonary edema (14). When imaged by computed tomography, the pulmonary inflammatory infiltrates and edema appear as ground-glass opacities (146). The secretion of proteases and reactive oxygen species (ROSs) by inflammatory cells further damages the lung microvascular barrier, increasing the permeability of endothelial and epithelial cells (136). Ultimately, the flooding of protein-rich fluid in the interstitia and airspaces causes ARDS manifested by impaired oxygen diffusion capacity (14). Postmortem examination also reveals partial fibrosis and pneumocyte hyperplasia, which lead to thickening and collapse of alveoli (117). Besides infiltration of airspaces with mononuclear cells (mainly lymphocytes), autopsy studies reveal multinucleated syncytia formed by SARS-CoV-2-infected pneumocytes (153).

Normally, cytokines have short half-lives and only act on target cells within lymphoid tissues or at sites of inflammation. In patients with severe COVID-19, the excessive and uncontrolled release of proinflammatory cytokines exceeds protective thresholds and reaches pathological levels. This so-called cytokine storm, or cytokine release syndrome (CRS), causes life-threatening complications, including viral sepsis and multiorgan failure. Multiple proinflammatory cytokines have been implicated in the pathogenesis of COVID-19, particularly interleukin-1 (IL-1), IL-6, and tumor necrosis factor alpha (TNF-α) (14). Single-cell RNA sequencing of COVID-19 clinical samples also shows that in critical cases, there are stronger interactions between epithelial and immune cells, with inflammatory macrophages expressing various cytokines (21). Among them, IL-6 and IL-8 are observed at high levels in COVID-19 patients with severe or critical disease, and these high levels of IL-6 and IL-8 are correlated with lymphocytopenia that is predictive of disease progression (162).

Annu. Rev. Microbiol. 2021.75:19-47. Downloaded from www.annualreviews.org
Access provided by 42.2.127.201 on 10/26/21. For personal use only.

Annu. Rev. Microbiol. 2021.75:19-47. Downloaded from www.annualreviews.org
Access provided by 42.2.127.201 on 10/26/21. For personal use only.

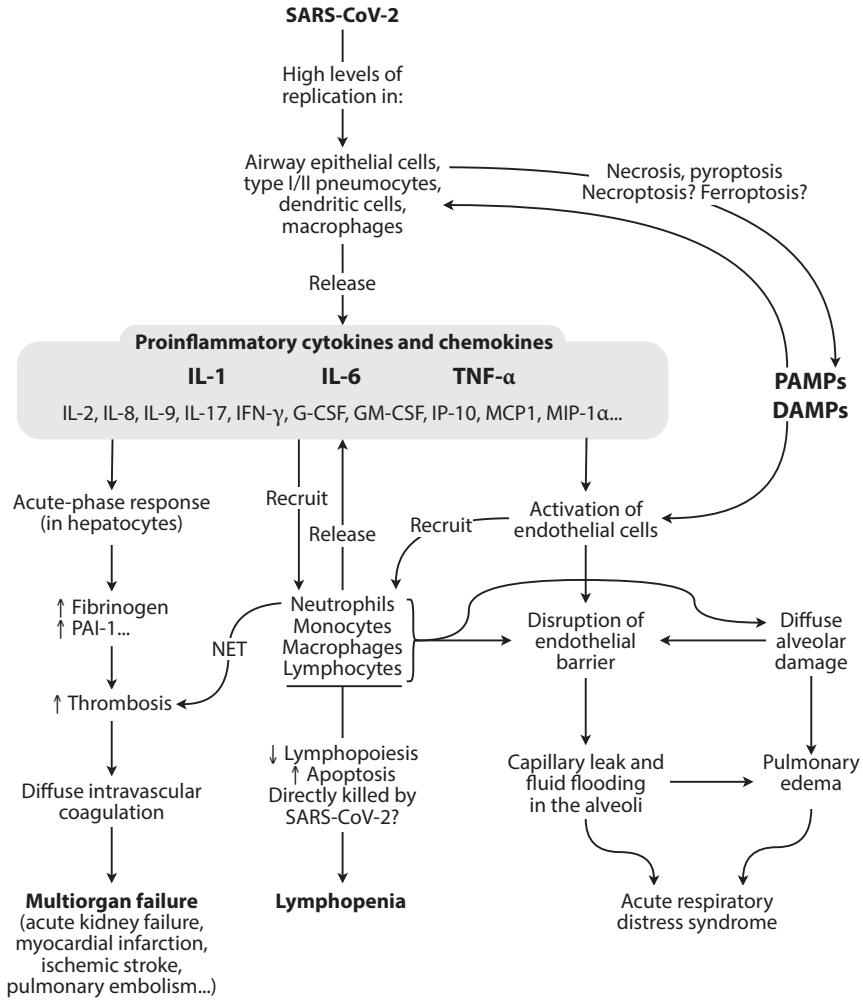

Figure 4

Simplified model of immunopathogenesis in COVID-19. Abbreviations: CoV, coronavirus; COVID-19, coronavirus disease 2019; DAMP, damage-associated molecular pattern; G-CSF, granulocyte colony-stimulating factor; GM-CSF, granulocyte-macrophage colony-stimulating factor; IFN-γ, interferon gamma; IP-10, IFN-γ-inducible protein 10; MCP1, monocyte chemoattractant protein 1; MIP-1α, macrophage inflammatory protein 1-alpha; NET, neutrophil extracellular trap; PAI-1, plasminogen activator inhibitor 1; PAMP, pathogen-associated molecular pattern; SARS, severe acute respiratory syndrome; TNF-α, tumor necrosis factor alpha.

Immunothrombotic dysregulation is at the center of multiorgan failure in patients with severe COVID-19. Proinflammatory cytokines (particularly IL-6) activate the acute-phase response in the hepatocytes, thereby increasing the production of prothrombotic and antifibrinolytic proteins such as fibrinogen and plasminogen activator inhibitor 1 (83). Activated neutrophils also release neutrophil extracellular traps (NETs) that further aggregate with platelets and fibrin. The resulting thrombotic complications include acute kidney failure and pulmonary embolism as well as ischemic damage to vital organs like the brain and the heart (146). Indeed, disseminated intravascular coagulation (DIC) was observed in many individuals who died of COVID-19 (135).

Histopathology of COVID-19 autopsy specimens also detected NET-containing inflammatory microvascular thrombi in the lung, kidney, and heart (98).

Lymphopenia is detected in most hospitalized COVID-19 patients (146), and reduced $CD4^+$ and $CD8^+$ T cell counts upon admission are predictive of disease progression (162). Compared with other viral diseases, COVID-19 is associated with lymphopenia that is more severe and persistent and is more selective for T cell lineages (19). Mechanistically, inflammatory cytokines may promote excessive activation and possibly subsequent exhaustion of T cells, and the induction of apoptosis presumably contributes to T cell depletion (19).

Although most children infected with SARS-CoV-2 have mild or no symptoms, some develop multisystem inflammatory syndrome (MIS-C), characterized by high fevers and symptoms that resemble those of Kawasaki disease: conjunctivitis, mucocutaneous rash, and coronary artery dilation (24). Patients with severe MIS-C also develop cardiovascular shock, encephalitis, and multiorgan failure. Although not fully understood, the pathogenesis of MIS-C involves multiple autoantibodies, and it is different from the cytokine storm in adults suffering from severe COVID-19 (24).

Immunopathologies have also been associated with infections of some animal CoVs. For example, FIPV virions opsonized by nonneutralizing antibodies bind to Fc receptors on the surface of macrophages and DCs, resulting in antibody-dependent enhancement (ADE) of entry (107). FIPV-infected macrophages also induce apoptosis of lymphocytes and produce IL-10, which leads to a T helper type 2 (Th2)-biased nonprotective immune response (107). Also, activated macrophages and T lymphocytes are implicated in demyelination in mice infected with JHM or A59 strains of MHV (107). As COVID-19-related neural damage and lymphopenia have been reported (162), it is important to further characterize these immunopathogenic mechanisms.

IMMUNE RESPONSE IN COVID-19 AND OTHER CORONAVIRUS DISEASES

Similar to other CoVs, SARS-CoV-2 may adopt various mechanisms to evade, suppress, or subvert the innate immune response. A robust IFN-I response in the late stage of severe COVID-19 may be responsible for systemic inflammation and immunopathogenesis. Unlike low-pathogenic HCoVs that typically induce short-lasting immunity, SARS-CoV-2 may induce a protective antibody and T cell response with longer immune memory.

Innate Immunity

The innate immune response is crucial for the initial detection and restriction of viral infection and the subsequent activation of the adaptive immune system. A highly defective IFN-I response, characterized by no or low interferon production and activity, is associated with persistent viremia and an exacerbated inflammatory response in patients with severe COVID-19 (47). In line with this, recent studies have revealed that inborn errors of IFN-I immunity and induction of autoantibodies against IFN-I are implicated in life-threatening COVID-19 (7, 161). In particular, an imbalanced host response characterized by low interferon levels and elevated production of proinflammatory cytokines may underlie the pathogenesis of severe COVID-19 (10). On the other hand, it has also been shown that a delayed, robust IFN-I response may exacerbate hyperinflammation and promote progression to severe COVID-19 (73). In this section, we review the innate immune response and recently identified viral antagonizing mechanisms during CoV infections.

Induction of type I and type III interferons. The innate immune response is initiated by the binding of PAMPs to pattern recognition receptors (PRRs), which include ubiquitous retinoic

Annu. Rev. Microbiol. 2021.75:19-47. Downloaded from www.annualreviews.org
Access provided by 42.2.127.201 on 10/26/21. For personal use only.

acid–inducible gene I (RIG-I)-like receptors and endosomal Toll-like receptors (TLRs) expressed by immune cells. CoV genomes are recognized by RIG-I and MDA5 in the cytosol (77, 116), while TLR3, TLR4, and TLR7 are required for interferon induction by SARS-CoV and MERS-CoV (118, 140). The M protein of SARS-CoV was also recently identified as a PAMP recognized by TLR4 (145). PRRs then activate adaptor proteins and downstream pathways, culminating in the induction of critical transcription factors, such as NF-κB, interferon regulatory factor 3 (IRF3), and IRF7. These proteins synergistically induce the transcription of IFN-I/IFN-III and proinflammatory cytokines (104).

During replication, CoV RNA is modified by the guanine-*N*7-methyltransferase activity of nsp14 (18) and the 2′-*O*-methyltransferase (2-*O*-MT) activity of nsp16 (26). CoVs lacking 2-*O*-MT exhibit high levels of MDA5-dependent IFN-I induction and are attenuated in vivo (92, 166). Also, the endoribonuclease (EndoU) activity of nsp15 cleaves 5′-polyuridine sequences in the negative-sense RNAs recognized by MDA5 (46), whereas the NS6 protein of PDCoV binds to and attenuates double-stranded RNA (dsRNA) binding of RIG-I/MDA5 (31).

CoVs have also evolved numerous mechanisms to suppress interferon induction. For example, the deubiquitination and de-ISGylation activities of nsp3 target multiple key factors in innate immune signaling (38). Compared with SARS-CoV PLpro, SARS-CoV-2 PLpro has higher affinity and specificity toward ISG15, and it mediates de-ISGylation of IRF3 to attenuate IFN-I induction (126). The nuclear translocation and activity of key transcription factors are also inhibited by the N protein, ORF3b, and ORF6 of SARS-CoV and the M protein, N protein, ORF4a, ORF4b, ORF5, and ORF8b of MERS-CoV (16, 104, 150).

Interferon signaling and the antiviral interferon-stimulated genes. The translated IFN-I (IFN-α/β/ε/κ/ω) and IFN-III (IFN-λ) are released and bind to receptors in an autocrine/paracrine manner. IFN-I receptor (IFNAR) is ubiquitously expressed, whereas IFN-III receptor (IFNLR) is mainly expressed on epithelial cells and myeloid cells (104). Binding of interferons to the receptors activates the Janus kinase (JAK)/signal transducers and activators of transcription (STAT) pathway and induces the expression of ISGs. ISGs include antiviral proteins and regulators of innate immunity, and most of their mechanisms are not fully characterized (119).

In cultured epithelial cell lines, IFN-I and IFN-III inhibit SARS-CoV-2 replication in a dose-dependent manner, while SARS-CoV replication is only restricted by IFN-α (34), suggesting that SARS-CoV may have evolved additional interferon-antagonistic mechanisms not shared by SARS-CoV-2. However, interferon induction is attenuated in DCs infected with SARS-CoV-2, presumably due to inhibition of STAT1 phosphorylation (156). Notably, nsp1 of alpha- and betacoronaviruses and ORF5b of IBV induce host translation shutoff to limit the production of interferon proteins (65). Other mechanisms include inhibiting nuclear translocation and promoting degradation of STAT proteins (104).

Oligoadenylate synthetase (OAS) and latent endoribonuclease (RNaseL) are relatively well-known ISGs. OAS is activated by dsRNA and synthesizes 2′-5′-oligoadenylate, which is a second messenger to activate RNaseL. Activated RNaseL indiscriminately cleaves host and viral RNA to restrict viral replication (119). Notably, accessory protein NS2 of MHV and ORF4b of MERS-CoV exhibit 2′,5′-phosphodiesterase activity, which degrades 2′-5′-oligoadenylate and counters the antiviral effect of OAS-RNaseL (22).

Ironically, some CoV receptors and entry factors are indeed ISGs. For example, the SARS-CoV-2 receptor ACE2 is a human ISG, suggesting that SARS-CoV-2 exploits host interferon signaling to upregulate ACE2 to facilitate its own infection (165). Also, whereas interferon-inducible transmembrane (IFITM) proteins typically inhibit entry of SARS-CoV and MERS-CoV, they indeed serve as entry factors for HCoV-OC43 (163).

Annu. Rev. Microbiol. 2021.75:19-47. Downloaded from www.annualreviews.org
Access provided by 42.2.127.201 on 10/26/21. For personal use only.

Induction and signaling of proinflammatory cytokines. CoV infection in macrophages and DCs also induces secretion of proinflammatory cytokines such as IL-6 and TNF-α. Similar to the induction of interferons, induction of these cytokines is governed by key transcription factors such as NF-κB. In addition, transcription of IL-6 is also activated by IRF1 downstream of the IFN-JAK/STAT pathway and by other proinflammatory cytokines including IL-1 and TNF-α (63). Notably, recombinant SARS-CoV S protein stimulates IL-6 and TNF-α in macrophages in an NF-κB-dependent manner, suggesting that receptor binding also contributes to cytokine induction (144).

IL-6 binds to membrane IL-6 receptor (mIL-6R) on immune cells and causes pleiotropic effects, such as differentiation of B cells into plasma cells and differentiation of $CD4^+$ T cells and follicular T helper (Tfh) cells (63). In addition, IL-6 at high concentrations in plasma binds to soluble IL-6 receptor (sIL-6R) and engages gp130 to form a signaling complex on potentially all cell surfaces. This *trans*-signaling can trigger excessive release of other proinflammatory cytokines and additional IL-6, leading to CRS in patients suffering from severe COVID-19 (42).

Produced as a membrane-associated cytokine, TNF-α can be cleaved by TNF-α-converting enzyme (TACE) and released as a soluble cytokine. Localized TNF-α increases vascular permeability and facilitates the extravasation of monocytes and neutrophils, while systemic release of TNF-α can trigger blood clotting and lead to DIC. Binding of SARS-CoV S protein to ACE2 activates TACE, which increases the cleavage and release of TNF-α (48). It is possible that similar mechanisms lead to an excessive TNF-α level in patients with severe COVID-19.

Adaptive Immune Response

In one early study, antiviral IgG was detected in COVID-19 patients within 19 days after symptom onset (86). The magnitude and durability of antibody responses are greater in patients with severe COVID-19 (61), but even asymptomatic infected people and those with mild disease have SARS-CoV-2-specific antibodies (86). SARS-CoV-2 infection induces potent neutralizing antibodies that compete with ACE2 for RBD binding, thereby blocking viral entry (61).

However, some studies suggest that humoral immunity to SARS-CoV-2 is often short-lived, and most SARS-CoV-2 antibodies exhibit low levels of somatic hypermutation (12, 86) that may be partially caused by a lack of germinal center (GC) responses (62). GCs are transient structures within secondary lymphoid organs, where antigen-activated B cells differentiate into memory B cells or long-lived plasma cells with the help of Tfh cells. Excessive TNF-α may suppress Tfh cell differentiation and the formation of GC responses in patients with severe COVID-19, but whether the same holds true for milder COVID-19 infections remains unknown (62). Nonetheless, a recent study shows that antiviral antibodies against SARS-CoV-2 do not decline within four months after diagnosis (43), and reinfection of SARS-CoV-2 in recovered patients seems to be rare (138).

In addition to T cell–biased lymphopenia, increased expression of activation and/or exhaustion markers in both $CD8^+$ and $CD4^+$ T cells is observed in COVID-19 patients, potentially contributing to the suboptimal or inappropriate T cell responses associated with severe disease (19). Notably, SARS-CoV-2 induces potent memory T cell responses in most convalescent individuals, even for asymptomatic individuals and those with undetectable antibody responses (120), but whether these T cells confer protection against future reinfection remains to be determined. Moreover, preexisting SARS-CoV-2-reactive $CD4^+$ T cells have been detected in 35% of unexposed healthy donors, presumably generated during past encounters with endemic common cold CoVs (11). This cross-reactive T cell memory may partially explain the extensive heterogeneity observed in COVID-19.

Annu. Rev. Microbiol. 2021.75:19-47. Downloaded from www.annualreviews.org
Access provided by 42.2.127.201 on 10/26/21. For personal use only.

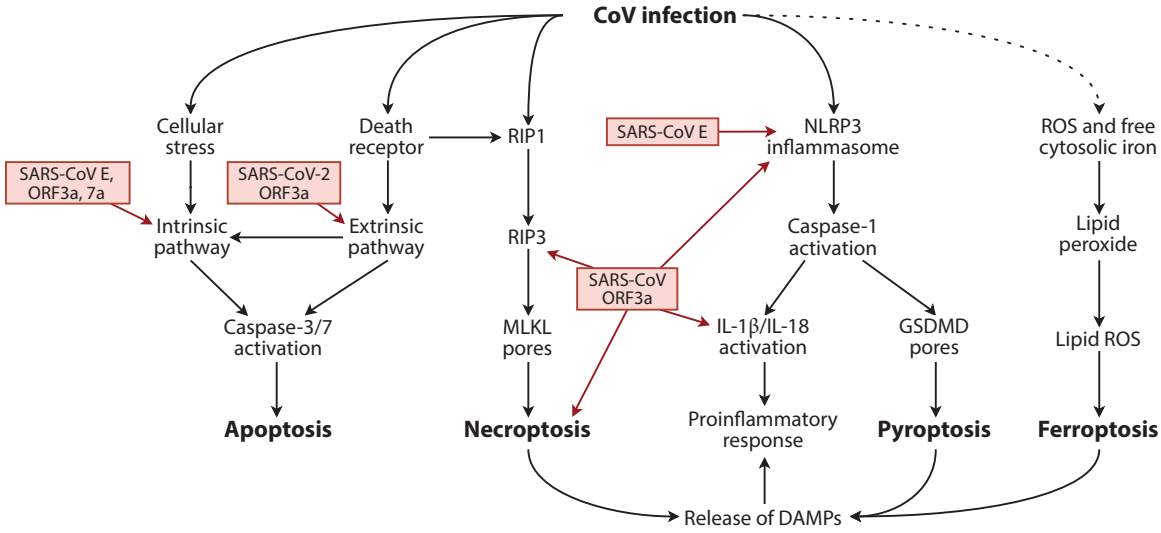

Figure 5

Four types of programmed cell death activated by CoV infection. Induction of ROSs and free cytosolic iron by CoV infection is only speculative (*dotted arrow*). Abbreviations: CoV, coronavirus; DAMP, damage-associated molecular pattern; E, envelope; GSDMD, gasdermin D; MLKL, mixed lineage kinase domain–like protein; NLRP3, NOD-, LRR-, and pyrin domain–containing protein 3; ORF3a, open reading frame 3a; RIP1, receptor-interacting protein 1; ROS, reactive oxygen species; SARS, severe acute respiratory syndrome.

Annu. Rev. Microbiol. 2021.75:19-47. Downloaded from www.annualreviews.org
Access provided by 42.2.127.201 on 10/26/21. For personal use only.

CORONAVIRUS-HOST INTERACTION

The replication of CoVs co-opts host factors and activates important signaling pathways (38). Induction of programmed cell death (PCD) by SARS-CoV-2 and other CoVs may contribute to immunopathogenesis. Activation of a cellular stress response may also regulate CoV replication and induction of the immune response.

Programmed Cell Death

Four types of PCD have been described: apoptosis, pyroptosis, necroptosis, and ferroptosis. Here we briefly review the signaling pathways and outcomes of PCD in the context of CoV infection (**Figure 5**).

Apoptosis. Apoptosis is a highly regulated, noninflammatory form of PCD that can be activated by the intrinsic pathway governed by B cell lymphoma 2 (Bcl2) family proteins in response to cellular stresses, or by the extrinsic pathway initiated by death receptors on the cell surface (38). Both pathways converge in the activation of executive caspase-3/7.

Apoptosis has been implicated in the pathogenesis of CoV diseases. For example, MERS-CoV infection upregulates mothers against decapentaplegic protein 7 (Smad7) and fibroblast growth factor 2 (FGF2), which mediate apoptosis that contributes to lung and kidney damage (157). Apoptosis is also induced in CoV-infected immune cells. MERS-CoV efficiently infects human primary T lymphocytes, activating both the extrinsic and intrinsic pathways (20). Also, in mice with MHV3-induced fulminant hepatitis, deletion of B and T lymphocyte attenuator (BTLA) results in rapid apoptosis of MHV3-infected macrophages, which alleviates liver damage and reduces mortality (155).

Recently, it was found that overexpression of ORF3a of SARS-CoV-2 activates the extrinsic apoptotic pathway (115). ORF3a of SARS-CoV-2 shares 73% amino acid homology with that of SARS-CoV, and Cys133, which is essential for potassium ion channel activity, is also conserved (87). Other studies have shown that deletion of ORF3a reduces cell death caused by SARS-CoV infection (36). It is yet to be confirmed whether apoptosis is a main mechanism that contributes to lymphopenia in patients with severe COVID-19.

Pyroptosis. Pyroptosis is highly proinflammatory PCD that is activated mainly in immune cells. Pyroptosis mediated by the NOD-, LRR-, and pyrin domain–containing protein 3 (NLRP3) inflammasome requires two signals (134). Cytokines and PAMPs provide signal 1, which induces transcription of inflammasome components and IL-1β/IL-18. Various PAMPs and DAMPs then provide signal 2, which activates the NLRP3 inflammasome. Activated caspase-1 cleaves gasdermin D, enabling it to form permeabilizing pores on the plasma membrane. Activated caspase-1 also cleaves IL-1β/IL-18 to facilitate the release of these proinflammatory cytokines (134).

Increased caspase-1 activity and significantly elevated levels of IL-1β and IL-18 are detected in patients with severe COVID-19 and may contribute to T cell depletion and immunopathogenesis of SARS-CoV-2 (88). Notably, fulminant hepatitis caused by MHV3 infection is ameliorated in NLRP3 or caspase-1 knockout mice, highlighting the roles of NLRP3 and caspase-1 in MHV3 pathogenesis (44). Interestingly, NLRP3-mediated inflammation is dampened in bat cells infected with MERS-CoV, which partially explains how bats serve as a natural reservoir for MERS-CoV and other zoonotic viruses (3).

The E protein and ORF3a of SARS-CoV are implicated in pyroptosis induction. Acting as a calcium channel, SARS-CoV E protein activates the NLRP3 inflammasome in VeroE6 cells (101) and contributes to IL-1β expression and inflammatory lung damage in a mouse model (100). By regulating potassium efflux and mitochondrial ROS production, SARS-CoV ORF3a stimulates IL-1β secretion in lipopolysaccharide-primed macrophages (17). Mechanistically, ORF3a not only promotes ubiquitination and activation of NF-κB/p105 to induce transcription of pro-IL-1β (signal 1) but also facilitates the assembly of the NLRP3 inflammasome (signal 2) (129).

Necroptosis and ferroptosis. Necroptosis is activated by death receptors and the receptor-interacting protein 1 (RIP1)–RIP3–mixed lineage kinase domain–like protein (MLKL) phosphorylation cascade. Oligomerized MLKL then forms disrupting pores in the plasma membrane, leading to lytic cell death and the release of DAMPs. Infection of an HCoV-OC43 neurovirulent mutant induces necroptosis but not apoptosis in neuronal cells (91). Overexpression of SARS-CoV ORF3a also induces necroptotic cell death that is RIP3 dependent but MLKL independent (160). Notably, mice with RIP1 deleted in liver parenchymal cells develop more severe fulminant hepatitis caused by MHV3 infection. It has been suggested that RIP1 protects hepatocytes from damage caused by TNF-α secreted by macrophages (32).

Ferroptosis is an iron- and ROS-dependent form of PCD. When the antioxidant glutathione is depleted, glutathione peroxidase 4 is suppressed and cytotoxic lipid peroxides accumulate. In the presence of free cytosolic iron, lipid peroxides are converted to lipid ROSs, leading to membrane rupture and the release of DAMPs (133). There is no report of ferroptosis associated with CoV infection. However, hyperferritinemia and altered iron homeostasis in some patients with severe COVID-19 have led to speculation of ferroptosis in viral pathogenesis (30).

Cellular Stress Response

Infections with numerous CoVs activate the three branches of the unfolded protein response (UPR): PERK [protein kinase R (PKR)-like ER protein kinase], IRE1 (inositol-requiring

Annu. Rev. Microbiol. 2021.75:19-47. Downloaded from www.annualreviews.org
Access provided by 42.2.127.201 on 10/26/21. For personal use only.

enzyme 1), and ATF6 (activating transcription factor 6) (38). Although it does not significantly affect CoV replication, the UPR is implicated in the regulation of autophagy, apoptosis, and innate immunity during CoV infection (38).

During the integrated stress response, phosphorylation of eIF2α by PERK, PKR, and related kinases suppresses global protein translation. PERK, PKR, and eIF2α are activated in cells infected with SARS-CoV or IBV (67, 82). In TGEV-infected cells, PERK- and eIF2α-mediated translational attenuation reduced the level of NF-κB inhibitor α, thereby activating NF-κB-dependent production of IFN-I, which suppresses TGEV replication (154).

Infection with some CoVs induces the formation of stress granules (SGs), cytoplasmic nonmembrane-bound compartments assembled by untranslating messenger ribonucleoproteins (112). During TGEV infection, polypyrimidine tract-binding protein associates with viral RNAs and relocalizes them to SGs to regulate viral gene expression (131). In contrast, IBV genomic RNA is not diverted to SGs, and IBV-induced SG formation is uncoupled from eIF2α-dependent translation shutoff (13). Finally, ORF4a of MERS-CoV binds to dsRNA and suppresses PKR activation, thereby rescuing translation inhibition and preventing SG formation (113).

CoV infection also induces immediate early genes (IEGs), genes activated immediately upon stimulation without de novo protein synthesis. For example, early growth response protein 1 (*EGR1*), *cJUN*, and *cFOS* are IEGs that activate the transcription of proinflammatory cytokines (38, 159a). In contrast, HCoV-229E infection induces TNF-α-induced protein 3, which suppresses NF-κB-dependent cytokine production (110).

DIAGNOSIS, TREATMENT, AND PREVENTION

Broad-spectrum inhibitors targeting proteases and RDRP have shown promising antiviral effects against SARS-CoV-2 and other CoVs. Meanwhile, COVID-19 vaccines using different technology platforms are being developed or clinically tested, with promising outcomes.

Diagnosis

The most reliable test for COVID-19 is reverse-transcription polymerase chain reaction (RT-PCR) that detects the genomic RNA of SARS-CoV-2. Antibody tests detect past infection and may not be effective at the early phase of infection, but they can be valuable for serological surveillance in a population. Antigen tests detect SARS-CoV-2 proteins and are less sensitive than RT-PCR, but they can be used to rapidly identify the most infectious individuals.

Antivirals

Antivirals against CoVs mainly target viral proteases or RDRP.

Protease inhibitors. Both PLpro and Mpro are promising targets for antivirals against CoVs. A study using structure-guided design has identified PLpro inhibitors with nanomolar potency and high selectivity over homologous human DUB enzymes (6). Inhibitors of CoV Mpro have also been designed recently and have demonstrated antiviral effects against SARS-CoV-2 in primary airway epithelial cells and improved survival rates in MERS-CoV-infected mice (28, 114). Although no specific CoV protease inhibitor has been approved, the combination of HIV protease inhibitors lopinavir and ritonavir has been tested in COVID-19 patients; however, its effectiveness is still uncertain (127).

RDRP inhibitors. The CoV RDRP can be inhibited by classic nucleoside analogs like ribavirin, which has been tested in combination with IFN-β and protease inhibitors in COVID-19 patients

Annu. Rev. Microbiol. 2021.75:19-47. Downloaded from www.annualreviews.org
Access provided by 42.2.127.201 on 10/26/21. For personal use only.

(58). The nucleotide prodrug remdesivir also exhibits broad-spectrum anti-CoV activity in cell culture and alleviates disease severity in a mouse model of SARS-CoV (122). Remdesivir is recognized as a substrate by the CoV RDRP and covalently incorporated, resulting in a delayed chain termination (158). An early trial showed that remdesivir shortens recovery time in patients with severe COVID-19 but has no significant effect on mortality (9).

Notably, CoV nsp14 ExoN exhibits proofreading activity that significantly reduces the efficacy of remdesivir and other nucleoside analogs (1). A novel nucleotide analog called β-D-N^4-hydroxycytidine (NHC) was recently developed. The inhibitory effect of NHC was comparable in MHV lacking ExoN activity and in wild-type MHV, suggesting that NHC may evade or overcome the CoV ExoN activity (2). NHC also has promising antiviral activity in cell culture and in mouse models of SARS-CoV and MERS-CoV (123). Further large-scale randomized trials are warranted to validate the efficacy of RDRP inhibitors in treating COVID-19 and other CoV diseases.

Other Therapeutic Interventions

Besides antivirals, various therapeutic interventions have also been attempted in COVID-19 patients. Notably, the commonly used steroid dexamethasone significantly reduces the mortality rate of patients with critical COVID-19 (54). Transfusion of convalescent plasma with high neutralizing antibody titers from recovered COVID-19 patients has also achieved promising results in some trials (93). In contrast, hydroxychloroquine has been associated with increased risk of adverse events, and recent studies also suggest that it does not inhibit infection of human lung cells with SARS-CoV-2 (53, 122).

Neutralizing monoclonal antibodies (mAbs) targeting the RBD of SARS-CoV-2 have shown promising therapeutic potential in animal models and early trials (89, 159). A cocktail of mAbs targeting different regions of the RBD can reduce the risk of mutational escape by the virus (8), and ultrapotent mAbs block SARS-CoV-2 attachment by multiple mechanisms, including locking the S protein in a closed conformation (139). In addition, mAbs against IL-6, IL-6 receptor, or other proinflammatory cytokines (IL-1 and TNF-α) have been used to dampen the CRS in patients with severe COVID-19 (56).

Vaccines

The ongoing development and deployment of SARS-CoV-2 vaccines are contentious issues beyond the scope of this article. Here we focus on the theoretical bases and different approaches adopted to develop vaccines for SARS-CoV-2.

In addition to inactivated vaccines, most vaccine candidates for SARS-CoV-2 target the S protein, due to its essential role in receptor binding and viral entry. Modifications, such as introduction of two prolines into the S2 subunit, mutation of the S1/S2 furin cleavage site, deletion of the cytoplasmic tail, and addition of a trimerization tag to the C terminus, may increase protein stability and/or neutralizing antibody titers (27). As the primary target of S-specific neutralizing antibodies, the RBD of SARS-CoV-2 is also used as an immunogen.

Vaccine candidates for SARS and MERS were developed, but they were terminated at the preclinical stage. Currently, diseases caused by animal CoVs, including IBV and PEDV, are mainly controlled by live-attenuated and inactivated vaccines, but emerging variants have reduced the efficacy of classical vaccines (84b, 142). Vaccine candidates for COVID-19 are being developed based on a variety of technology platforms. Among them, the novel mRNA vaccines are relatively easy and quick to manufacture, with some promising results in early trials.

Previous studies suggested that some vaccine candidates for SARS and MERS enhanced the diseases in mice challenged with the respective virus in a process called vaccine-enhanced disease,

Annu. Rev. Microbiol. 2021.75:19-47. Downloaded from www.annualreviews.org
Access provided by 42.2.127.201 on 10/26/21. For personal use only.

characterized by the production of nonneutralizing antibodies and a Th2 cellular response that leads to eosinophil infiltration and highly inflammatory lung lesions (4). Specifically, low-affinity antibodies with limited or no neutralizing activity have been associated with ADE in which binding of Fc portions of antibodies to immune cells and/or complement proteins exacerbates disease (4). Encouragingly, early trials of three SARS-CoV-2 vaccine candidates demonstrate that immunization stimulates neutralizing antibodies and a Th1 cellular response (35, 59, 94).

CONCLUSION

Deployment of effective vaccines is of utmost importance to curb the COVID-19 pandemic, although there are uncertainties regarding the protection they may provide. Empowered by rapid and detailed structural characterizations of the SARS-CoV-2 S protein, RDRP, and proteases, and other potentially druggable proteins, antiviral screenings are progressing at an unprecedented scale and speed. Using state-of-the-art multi-omics approaches for COVID-19 patients and numerous model systems, researchers worldwide are revealing the molecular basis of SARS-CoV-2 replication and pathogenesis, as well as the diverse immune response it elicits.

Research on animal CoVs is also beneficial and important. First, all three highly pathogenic HCoVs are zoonotic, so a better understanding of CoV infections in wild and domesticated animals will allow us to predict their evolutionary trajectories and prepare for future outbreaks. Second, prototypic animal CoVs have been extensively studied for decades, and many of their replication and pathogenesis mechanisms are conserved and can be extrapolated to HCoVs. Finally, some animal CoV diseases impose significant burdens on the farming industry, so their prevention and control are crucial for global food security, particularly in a time of reduced production due to the pandemic.

Another pressing question is how and when the next zoonotic HCoV might emerge. SARS-CoV, MERS-CoV, and SARS-CoV-2 are all betacoronaviruses, with the first two originating in bats. As the mechanisms of genome replication are highly conserved among CoVs, the major barriers against zoonotic spillover seem to be receptor binding and the availability of other essential host factors yet to be identified. Mutations may gradually accumulate during adaptation inside intermediate hosts, and the recently reported transmission of SARS-CoV-2 from humans to minks and back to humans suggests that such species barriers can readily be breached.

The mechanisms underlying the substantial variations of immune response among people with COVID-19 are also of profound importance. Recent studies have identified human genetic variations associated with severe COVID-19, such as inborn errors of IFN-I immunity and autoantibodies against interferons. New insights may be gained by comparing the pathogenesis of highly pathogenic CoVs and that of their low-pathogenic counterparts. Identification of host and viral determinants of pathogenesis also has significant clinical implications and may lead to new targets for therapeutic interventions.

With the collective effort of the global scientific community, research discoveries on SARS-CoV-2 and COVID-19 are made and shared daily. Promising results from clinical trials of antivirals and vaccine candidates give us hope that ending the COVID-19 pandemic is only a matter of time. However, SARS-CoV-2 is just one of the numerous viral pathogens with zoonotic potential. Only continuous research on the biology and pathogenesis of CoVs and other (re)emerging viruses will allow us to gain the upper hand in future pandemics.

DISCLOSURE STATEMENT

The authors are not aware of any affiliations, memberships, funding, or financial holdings that might be perceived as affecting the objectivity of this review.

Annu. Rev. Microbiol. 2021.75:19-47. Downloaded from www.annualreviews.org
Access provided by 42.2.127.201 on 10/26/21. For personal use only.

ACKNOWLEDGMENTS

This work was partially supported by National Natural Science Foundation of China grants 31972660 and 31900135 and by Natural Science Foundation of Guangdong Province grant 2018A030313472.

LITERATURE CITED

1. Agostini ML, Andres EL, Sims AC, Graham RL, Sheahan TP, et al. 2018. Coronavirus susceptibility to the antiviral remdesivir (GS-5734) is mediated by the viral polymerase and the proofreading exoribonuclease. *mBio* 9(2):e00221-18
2. Agostini ML, Pruijssers AJ, Chappell JD, Gribble J, Lu X, et al. 2019. Small-molecule antiviral β-D-N^4-hydroxycytidine inhibits a proofreading-intact coronavirus with a high genetic barrier to resistance. *J. Virol.* 93(24):e01348-19
3. Ahn M, Anderson DE, Zhang Q, Tan CW, Lim BL, et al. 2019. Dampened NLRP3-mediated inflammation in bats and implications for a special viral reservoir host. *Nat. Microbiol.* 4(5):789–99
4. Arvin AM, Fink K, Schmid MA, Cathcart A, Spreafico R, et al. 2020. A perspective on potential antibody-dependent enhancement of SARS-CoV-2. *Nature* 584(7821):353–63
5. Athmer J, Fehr AR, Grunewald ME, Qu W, Wheeler DL, et al. 2018. Selective packaging in murine coronavirus promotes virulence by limiting type I interferon responses. *mBio* 9(3):e00272-18
6. Báez-Santos YM, Barraza SJ, Wilson MW, Agius MP, Mielech AM, et al. 2014. X-ray structural and biological evaluation of a series of potent and highly selective inhibitors of human coronavirus papain-like proteases. *J. Med. Chem.* 57(6):2393–412
7. Bastard P, Rosen LB, Zhang Q, Michailidis E, Hoffmann H-H, et al. 2020. Autoantibodies against type I IFNs in patients with life-threatening COVID-19. *Science* 370(6515):eabd4585
8. Baum A, Copin R, Ajithdoss D, Zhou A, Lanza K, et al. 2020. REGN-COV2 antibody cocktail prevents and treats SARS-CoV-2 infection in rhesus macaques and hamsters. bioRxiv 2020.08.02.233320
9. Beigel JH, Tomashek KM, Dodd LE, Mehta AK, Zingman BS, et al. 2020. Remdesivir for the treatment of Covid-19—Final report. *N. Engl. J. Med.* 383(19):1813–26
10. Blanco-Melo D, Nilsson-Payant BE, Liu W-C, Uhl S, Hoagland D, et al. 2020. Imbalanced host response to SARS-CoV-2 drives development of COVID-19. *Cell* 181(5):1036–45.e9
11. Braun J, Loyal L, Frentsch M, Wendisch D, Georg P, et al. 2020. SARS-CoV-2-reactive T cells in healthy donors and patients with COVID-19. *Nature* 587:270–74
12. Brouwer PJM, Caniels TG, van der Straten K, Snitselaar JL, Aldon Y, et al. 2020. Potent neutralizing antibodies from COVID-19 patients define multiple targets of vulnerability. *Science* 369(6504):643–50
13. Brownsword MJ, Doyle N, Brocard M, Locker N, Maier HJ. 2020. Infectious bronchitis virus regulates cellular stress granule signaling. *Viruses* 12(5):536
14. Cao X. 2020. COVID-19: immunopathology and its implications for therapy. *Nat. Rev. Immunol.* 20(5):269–70
15. Deleted in proof
16. Chang C-Y, Liu HM, Chang M-F, Chang SC. 2020. Middle East respiratory syndrome coronavirus nucleocapsid protein suppresses type I and type III interferon induction by targeting RIG-I signaling. *J. Virol.* 94(13):e00099-20
17. Chen I-Y, Moriyama M, Chang M-F, Ichinohe T. 2019. Severe acute respiratory syndrome coronavirus viroporin 3a activates the NLRP3 inflammasome. *Front. Microbiol.* 10:50
18. Chen Y, Cai H, Pan J'A, Xiang N, Tien P, Ahola T, Guo D. 2009. Functional screen reveals SARS coronavirus nonstructural protein nsp14 as a novel cap N7 methyltransferase. *PNAS* 106(9):3484–89
19. Chen Z, Wherry EJ. 2020. T cell responses in patients with COVID-19. *Nat. Rev. Immunol.* 20(9):529–36
20. Chu H, Zhou J, Wong BH-Y, Li C, Chan JF-W, et al. 2016. Middle East respiratory syndrome coronavirus efficiently infects human primary T lymphocytes and activates the extrinsic and intrinsic apoptosis pathways. *J. Infect. Dis.* 213(6):904–14
21. Chua RL, Lukassen S, Trump S, Hennig BP, Wendisch D, et al. 2020. COVID-19 severity correlates with airway epithelium–immune cell interactions identified by single-cell analysis. *Nat. Biotechnol.* 38:970–79

Annu. Rev. Microbiol. 2021.75:19-47. Downloaded from www.annualreviews.org
Access provided by 42.2.127.201 on 10/26/21. For personal use only.

22. Comar CE, Goldstein SA, Li Y, Yount B, Baric RS, Weiss SR. 2019. Antagonism of dsRNA-induced innate immune pathways by NS4a and NS4b accessory proteins during MERS coronavirus infection. *mBio* 10(2):e00319-19
23. Cong Y, Ulasli M, Schepers H, Mauthe M, V'kovski P, et al. 2020. Nucleocapsid protein recruitment to replication-transcription complexes plays a crucial role in coronaviral life cycle. *J. Virol.* 94(4):e01925-19
24. Consiglio CR, Cotugno N, Sardh F, Pou C, Amodio D, et al. 2020. The immunology of multisystem inflammatory syndrome in children with COVID-19. *Cell* 183:968–81.e7
25. Cui J, Li F, Shi Z-L. 2019. Origin and evolution of pathogenic coronaviruses. *Nat. Rev. Microbiol.* 17(3):181–92
26. Daffis S, Szretter KJ, Schriewer J, Li J, Youn S, et al. 2010. 2′-*O* methylation of the viral mRNA cap evades host restriction by IFIT family members. *Nature* 468(7322):452–56
27. Dagotto G, Yu J, Barouch DH. 2020. Approaches and challenges in SARS-CoV-2 vaccine development. *Cell Host Microbe* 28(3):364–70
28. Dai W, Zhang B, Jiang X-M, Su H, Li J, et al. 2020. Structure-based design of antiviral drug candidates targeting the SARS-CoV-2 main protease. *Science* 368(6497):1331–35
29. Ding S, Liang TJ. 2020. Is SARS-CoV-2 also an enteric pathogen with potential fecal-oral transmission? A COVID-19 virological and clinical review. *Gastroenterology* 159(1):53–61
30. Edeas M, Saleh J, Peyssonnaux C. 2020. Iron: innocent bystander or vicious culprit in COVID-19 pathogenesis? *Int. J. Infect. Dis.* 97:303–5
31. Fang P, Fang L, Ren J, Hong Y, Liu X, et al. 2018. Porcine deltacoronavirus accessory protein NS6 antagonizes interferon beta production by interfering with the binding of RIG-I/MDA5 to double-stranded RNA. *J. Virol.* 92(15):e00712-18
32. Farooq M, Filliol A, Simoes Eugénio M, Piquet-Pellorce C, Dion S, et al. 2019. Depletion of RIPK1 in hepatocytes exacerbates liver damage in fulminant viral hepatitis. *Cell Death Dis.* 10(1):12
33. Fehr AR, Channappanavar R, Jankevicius G, Fett C, Zhao J, et al. 2016. The conserved coronavirus macrodomain promotes virulence and suppresses the innate immune response during severe acute respiratory syndrome coronavirus infection. *mBio* 7(6):e01721-16
34. Felgenhauer U, Schoen A, Gad HH, Hartmann R, Schaubmar AR, et al. 2020. Inhibition of SARS-CoV-2 by type I and type III interferons. *J. Biol. Chem.* 295(41):13958–64
35. Folegatti PM, Ewer KJ, Aley PK, Angus B, Becker S, et al. 2020. Safety and immunogenicity of the ChAdOx1 nCoV-19 vaccine against SARS-CoV-2: a preliminary report of a phase 1/2, single-blind, randomised controlled trial. *Lancet* 396(10249):467–78. **https://doi.org/10.1016/S0140-6736(20)31604-4**
36. Freundt EC, Yu L, Goldsmith CS, Welsh S, Cheng A, et al. 2010. The open reading frame 3a protein of severe acute respiratory syndrome-associated coronavirus promotes membrane rearrangement and cell death. *J. Virol.* 84(2):1097–109
37. Fung TS, Liu DX. 2018. Post-translational modifications of coronavirus proteins: roles and function. *Future Virol.* 13(6):405–30
38. Fung TS, Liu DX. 2019. Human coronavirus: host-pathogen interaction. *Annu. Rev. Microbiol.* 73:529–57
39. Funk CJ, Manzer R, Miura TA, Groshong SD, Ito Y, et al. 2009. Rat respiratory coronavirus infection: replication in airway and alveolar epithelial cells and the innate immune response. *J. Gen. Virol.* 90 (Part 12):2956–64
40. Gao Y, Yan L, Huang Y, Liu F, Zhao Y, et al. 2020. Structure of the RNA-dependent RNA polymerase from COVID-19 virus. *Science* 368(6492):779–82
41. Ghosh S, Dellibovi-Ragheb TA, Kerviel A, Pak E, Qiu Q, et al. 2020. β-Coronaviruses use lysosomes for egress instead of the biosynthetic secretory pathway. *Cell* 183:1520–35.e14
42. Gubernatorova EO, Gorshkova EA, Polinova AI, Drutskaya MS. 2020. IL-6: relevance for immunopathology of SARS-CoV-2. *Cytokine Growth Factor Rev.* 53:13–24
43. Gudbjartsson DF, Norddahl GL, Melsted P, Gunnarsdottir K, Holm H, et al. 2020. Humoral immune response to SARS-CoV-2 in Iceland. *New Engl. J. Med.* 383(18):1724–34

Annu. Rev. Microbiol. 2021.75:19-47. Downloaded from www.annualreviews.org
Access provided by 42.2.127.201 on 10/26/21. For personal use only.

44. Guo S, Yang C, Diao B, Huang X, Jin M, et al. 2015. The NLRP3 inflammasome and IL-1β accelerate immunologically mediated pathology in experimental viral fulminant hepatitis. *PLOS Pathog.* 11(9):e1005155
45. Haake C, Cook S, Pusterla N, Murphy B. 2020. Coronavirus infections in companion animals: virology, epidemiology, clinical and pathologic features. *Viruses* 12(9):1023
46. Hackbart M, Deng X, Baker SC. 2020. Coronavirus endoribonuclease targets viral polyuridine sequences to evade activating host sensors. *PNAS* 117(14):8094–103
47. Hadjadj J, Yatim N, Barnabei L, Corneau A, Boussier J, et al. 2020. Impaired type I interferon activity and inflammatory responses in severe COVID-19 patients. *Science* 369(6504):718–24
48. Haga S, Yamamoto N, Nakai-Murakami C, Osawa Y, Tokunaga K, et al. 2008. Modulation of TNF-α-converting enzyme by the spike protein of SARS-CoV and ACE2 induces TNF-α production and facilitates viral entry. *PNAS* 105(22):7809–14
49. Haring J, Perlman S. 2001. Mouse hepatitis virus. *Curr. Opin. Microbiol.* 4(4):462–66
50. He X, Lau EHY, Wu P, Deng X, Wang J, et al. 2020. Temporal dynamics in viral shedding and transmissibility of COVID-19. *Nat. Med.* 26(5):672–75
51. Hoffmann M, Kleine-Weber H, Pöhlmann S. 2020. A multibasic cleavage site in the spike protein of SARS-CoV-2 is essential for infection of human lung cells. *Mol. Cell* 78(4):779–84.e5
52. Hoffmann M, Kleine-Weber H, Schroeder S, Krüger N, Herrler T, et al. 2020. SARS-CoV-2 cell entry depends on ACE2 and TMPRSS2 and is blocked by a clinically proven protease inhibitor. *Cell* 181(2):271–80.e8
53. Hoffmann M, Mösbauer K, Hofmann-Winkler H, Kaul A, Kleine-Weber H, et al. 2020. Chloroquine does not inhibit infection of human lung cells with SARS-CoV-2. *Nature* 585(7826):588–90
54. Horby P, Lim WS, Emberson JR, Mafham M, Bell JL, et al. 2021. Dexamethasone in hospitalized patients with Covid-19. *N. Engl. J. Med.* 384:693–704
55. Hou YJ, Okuda K, Edwards CE, Martinez DR, Asakura T, et al. 2020. SARS-CoV-2 reverse genetics reveals a variable infection gradient in the respiratory tract. *Cell* 182(2):429–46.e14
56. Hu B, Guo H, Zhou P, Shi Z-L. 2021. Characteristics of SARS-CoV-2 and COVID-19. *Nat. Rev. Microbiol.* 19:141–54
57. Hu B, Zeng L-P, Yang X-L, Ge X-Y, Zhang W, et al. 2017. Discovery of a rich gene pool of bat SARS-related coronaviruses provides new insights into the origin of SARS coronavirus. *PLOS Pathog.* 13(11):e1006698
58. Hung IF-N, Lung K-C, Tso EY-K, Liu R, Chung TW-H, et al. 2020. Triple combination of interferon beta-1b, lopinavir-ritonavir, and ribavirin in the treatment of patients admitted to hospital with COVID-19: an open-label, randomised, phase 2 trial. *Lancet* 395(10238):1695–704
59. Jackson LA, Anderson EJ, Rouphael NG, Roberts PC, Makhene M, et al. 2020. An mRNA vaccine against SARS-CoV-2—preliminary report. *New Engl. J. Med.* 383:1920–31
60. Jin Z, Du X, Xu Y, Deng Y, Liu M, et al. 2020. Structure of M^{pro} from SARS-CoV-2 and discovery of its inhibitors. *Nature* 582(7811):289–93
61. Ju B, Zhang Q, Ge J, Wang R, Sun J, et al. 2020. Human neutralizing antibodies elicited by SARS-CoV-2 infection. *Nature* 584(7819):115–19
62. Kaneko N, Kuo H-H, Boucau J, Farmer JR, Allard-Chamard H, et al. 2020. Loss of Bcl-6-expressing T follicular helper cells and germinal centers in COVID-19. *Cell* 183(1):143–57.e13
63. Kang S, Tanaka T, Narazaki M, Kishimoto T. 2019. Targeting interleukin-6 signaling in clinic. *Immunity* 50(4):1007–23
64. Kim D, Lee J-Y, Yang J-S, Kim JW, Kim VN, Chang H. 2020. The architecture of SARS-CoV-2 transcriptome. *Cell* 181(4):914–21.e10
65. Kint J, Langereis MA, Maier HJ, Britton P, van Kuppeveld FJ, et al. 2016. Infectious bronchitis coronavirus limits interferon production by inducing a host shutoff that requires accessory protein 5b. *J. Virol.* 90(16):7519–28
66. Kissler SM, Tedijanto C, Goldstein E, Grad YH, Lipsitch M. 2020. Projecting the transmission dynamics of SARS-CoV-2 through the postpandemic period. *Science* 368(6493):860–68

Annu. Rev. Microbiol. 2021.75:19-47. Downloaded from www.annualreviews.org
Access provided by 42.2.127.201 on 10/26/21. For personal use only.

67. Krähling V, Stein DA, Spiegel M, Weber F, Mühlberger E. 2009. Severe acute respiratory syndrome coronavirus triggers apoptosis via protein kinase R but is resistant to its antiviral activity. *J. Virol.* 83(5):2298–309
68. Kuo L, Godeke GJ, Raamsman MJ, Masters PS, Rottier PJ. 2000. Retargeting of coronavirus by substitution of the spike glycoprotein ectodomain: crossing the host cell species barrier. *J. Virol.* 74(3):1393–406
69. Kuo L, Hurst-Hess KR, Koetzner CA, Masters PS. 2016. Analyses of coronavirus assembly interactions with interspecies membrane and nucleocapsid protein chimeras. *J. Virol.* 90(9):4357–68
70. Kuo L, Koetzner CA, Hurst KR, Masters PS. 2014. Recognition of the murine coronavirus genomic RNA packaging signal depends on the second RNA-binding domain of the nucleocapsid protein. *J. Virol.* 88(8):4451–65
71. Laude H, Rasschaert D, Delmas B, Godet M, Gelfi J, Charley B. 1990. Molecular biology of transmissible gastroenteritis virus. *Vet. Microbiol.* 23(1–4):147–54
72. Laude H, van Reeth K, Pensaert M. 1993. Porcine respiratory coronavirus: molecular features and virus-host interactions. *Vet. Res.* 24(2):125–50
73. Lee JS, Park S, Jeong HW, Ahn JY, Choi SJ, et al. 2020. Immunophenotyping of COVID-19 and influenza highlights the role of type I interferons in development of severe COVID-19. *Sci. Immunol.* 5(49):eabd1554
74. Lei J, Kusov Y, Hilgenfeld R. 2018. Nsp3 of coronaviruses: structures and functions of a large multidomain protein. *Antivir. Res.* 149:58–74
75. Letizia AG, Ramos I, Obla A, Goforth C, Weir DL, et al. 2020. SARS-CoV-2 transmission among Marine recruits during quarantine. *N. Engl. J. Med.* 383:2407–16
76. Li F. 2016. Structure, function, and evolution of coronavirus spike proteins. *Annu. Rev. Virol.* 3:237–61
77. Li J, Liu Y, Zhang X. 2010. Murine coronavirus induces type I interferon in oligodendrocytes through recognition by RIG-I and MDA5. *J. Virol.* 84(13):6472–82
78. Li Q, Wu J, Nie J, Zhang L, Hao H, et al. 2020. The impact of mutations in SARS-CoV-2 spike on viral infectivity and antigenicity. *Cell* 182(5):1284–94.e9
79. Li S, Yuan L, Dai G, Chen RA, Liu DX, Fung TS. 2019. Regulation of the ER stress response by the ion channel activity of the infectious bronchitis coronavirus envelope protein modulates virion release, apoptosis, viral fitness, and pathogenesis. *Front. Microbiol.* 10:3022
80. Li W, Shi Z, Yu M, Ren W, Smith C, et al. 2005. Bats are natural reservoirs of SARS-like coronaviruses. *Science* 310(5748):676–79
81. Li W, Zhang C, Sui J, Kuhn JH, Moore MJ, et al. 2005. Receptor and viral determinants of SARS-coronavirus adaptation to human ACE2. *EMBO J.* 24(8):1634–43
82. Liao Y, Fung TS, Huang M, Fang SG, Zhong Y, Liu DX. 2013. Upregulation of CHOP/GADD153 during coronavirus infectious bronchitis virus infection modulates apoptosis by restricting activation of the extracellular signal-regulated kinase pathway. *J. Virol.* 87(14):8124–34
83. Libby P, Lüscher T. 2020. COVID-19 is, in the end, an endothelial disease. *Eur. Heart J.* 41(32):3038–44
84. Liu DX, Fung TS, Chong KK-L, Shukla A, Hilgenfeld R. 2014. Accessory proteins of SARS-CoV and other coronaviruses. *Antivir. Res.* 109:97–109
84a. Liu DX, Liang JQ, Fung TS. 2021. Human coronavirus-229E, -OC43, -NL63, and -HKU1 (*Coronaviridae*). In *Encyclopedia of Virology*, Vol. 2, ed. DH Bamford, M Zuckerman, pp. 428–40. Amsterdam: Academic. 4th ed.
84b. Liu DX, Ng YL, Fung TS. 2019. Infectious bronchitis virus. In *Avian Virology: Current Research and Future Trends*, ed. SK Samal, pp. 133–78. Norfolk, UK: Caister Acad. Press
85. Liu Y, Ning Z, Chen Y, Guo M, Liu Y, et al. 2020. Aerodynamic analysis of SARS-CoV-2 in two Wuhan hospitals. *Nature* 582(7813):557–60
86. Long Q-X, Liu B-Z, Deng H-J, Wu G-C, Deng K, et al. 2020. Antibody responses to SARS-CoV-2 in patients with COVID-19. *Nat. Med.* 26(6):845–48
87. Lu W, Zheng B-J, Xu K, Schwarz W, Du L, et al. 2006. Severe acute respiratory syndrome-associated coronavirus 3a protein forms an ion channel and modulates virus release. *PNAS* 103(33):12540–45
88. Lucas C, Wong P, Klein J, Castro TBR, Silva J, et al. 2020. Longitudinal analyses reveal immunological misfiring in severe COVID-19. *Nature* 584(7821):463–69

Annu. Rev. Microbiol. 2021.75:19-47. Downloaded from www.annualreviews.org
Access provided by 42.2.127.201 on 10/26/21. For personal use only.

89. Lv Z, Deng Y-Q, Ye Q, Cao L, Sun C-Y, et al. 2020. Structural basis for neutralization of SARS-CoV-2 and SARS-CoV by a potent therapeutic antibody. *Science* 369(6510):1505–9
90. Ma-Lauer Y, Carbajo-Lozoya J, Hein MY, Müller MA, Deng W, et al. 2016. p53 down-regulates SARS coronavirus replication and is targeted by the SARS-unique domain and PLpro via E3 ubiquitin ligase RCHY1. *PNAS* 113(35):E5192–201
91. Meessen-Pinard M, Le Coupanec A, Desforges M, Talbot PJ. 2016. Pivotal role of receptor-interacting protein kinase 1 and mixed lineage kinase domain-like in neuronal cell death induced by the human neuroinvasive coronavirus OC43. *J. Virol.* 91(1):e01513-16
92. Menachery VD, Gralinski LE, Mitchell HD, Dinnon KH 3rd, Leist SR, et al. 2017. Middle East respiratory syndrome coronavirus nonstructural protein 16 is necessary for interferon resistance and viral pathogenesis. *mSphere* 2(6):e00346-17
93. Montelongo-Jauregui D, Vila T, Sultan AS, Jabra-Rizk MA. 2020. Convalescent serum therapy for COVID-19: a 19th century remedy for a 21st century disease. *PLOS Pathog.* 16(8):e1008735
94. Mulligan MJ, Lyke KE, Kitchin N, Absalon J, Gurtman A, et al. 2020. Phase I/II study of COVID-19 RNA vaccine BNT162b1 in adults. *Nature* 586:589–93. **https://doi.org/10.1038/s41586-020-2639-4**
95. Narayanan K, Huang C, Lokugamage K, Kamitani W, Ikegami T, Tseng C-TK, Makino S. 2008. Severe acute respiratory syndrome coronavirus nsp1 suppresses host gene expression, including that of type I interferon, in infected cells. *J. Virol.* 82(9):4471–79
96. Neuman BW, Buchmeier MJ. 2016. Supramolecular architecture of the coronavirus particle. *Adv. Virus Res.* 96:1–27
97. Nicklas W, Bleich A, Mähler M. 2012. Viral infections of laboratory mice. In *The Laboratory Mouse*, ed. HJ Hedrich, pp. 427–80. Boston: Academic. 2nd ed.
98. Nicolai L, Leunig A, Brambs S, Kaiser R, Weinberger T, et al. 2020. Immunothrombotic dysregulation in COVID-19 pneumonia is associated with respiratory failure and coagulopathy. *Circulation* 142(12):1176–89
99. Niemeyer D, Mösbauer K, Klein EM, Sieberg A, Mettelman RC, et al. 2018. The papain-like protease determines a virulence trait that varies among members of the SARS-coronavirus species. *PLOS Pathog.* 14(9):e1007296
100. Nieto-Torres JL, DeDiego ML, Verdiá-Báguena C, Jimenez-Guardeño JM, Regla-Nava JA, et al. 2014. Severe acute respiratory syndrome coronavirus envelope protein ion channel activity promotes virus fitness and pathogenesis. *PLOS Pathog.* 10(5):e1004077
101. Nieto-Torres JL, Verdiá-Báguena C, Jimenez-Guardeño JM, Regla-Nava JA, Castaño-Rodriguez C, et al. 2015. Severe acute respiratory syndrome coronavirus E protein transports calcium ions and activates the NLRP3 inflammasome. *Virology* 485:330–39
102. Onder G, Rezza G, Brusaferro S. 2020. Case-fatality rate and characteristics of patients dying in relation to COVID-19 in Italy. *JAMA* 323(18):1775–76
103. Oude Munnink BB, Sikkema RS, Nieuwenhuijse DF, Molenaar RJ, Munger E, et al. 2021. Transmission of SARS-CoV-2 on mink farms between humans and mink and back to humans. *Science* 371:172–77
104. Park A, Iwasaki A. 2020. Type I and type III interferons—induction, signaling, evasion, and application to combat COVID-19. *Cell Host Microbe* 27(6):870–78
105. Pedersen NC. 2014. An update on feline infectious peritonitis: virology and immunopathogenesis. *Vet. J.* 201(2):123–32
106. Peiris JSM, Lai ST, Poon LLM, Guan Y, Yam LYC, et al. 2003. Coronavirus as a possible cause of severe acute respiratory syndrome. *Lancet* 361(9366):1319–25
107. Perlman S, Dandekar AA. 2005. Immunopathogenesis of coronavirus infections: implications for SARS. *Nat. Rev. Immunol.* 5(12):917–27
108. Petersen E, Koopmans M, Go U, Hamer DH, Petrosillo N, et al. 2020. Comparing SARS-CoV-2 with SARS-CoV and influenza pandemics. *Lancet Infect. Dis.* 20(9):E238–44
109. Petrosillo N, Viceconte G, Ergonul O, Ippolito G, Petersen E. 2020. COVID-19, SARS and MERS: Are they closely related? *Clin. Microbiol. Infect.* 26(6):729–34
110. Poppe M, Wittig S, Jurida L, Bartkuhn M, Wilhelm J, et al. 2017. The NF-κB-dependent and -independent transcriptome and chromatin landscapes of human coronavirus 229E-infected cells. *PLOS Pathog.* 13(3):e1006286

Annu. Rev. Microbiol. 2021.75:19-47. Downloaded from www.annualreviews.org
Access provided by 42.2.127.201 on 10/26/21. For personal use only.

111. Puelles VG, Lütgehetmann M, Lindenmeyer MT, Sperhake JP, Wong MN, et al. 2020. Multiorgan and renal tropism of SARS-CoV-2. *New Engl. J. Med.* 383(6):590–92
112. Raaben M, Groot Koerkamp MJA, Rottier PJM, de Haan CAM. 2007. Mouse hepatitis coronavirus replication induces host translational shutoff and mRNA decay, with concomitant formation of stress granules and processing bodies. *Cell. Microbiol.* 9(9):2218–29
113. Rabouw HH, Langereis MA, Knaap RCM, Dalebout TJ, Canton J, et al. 2016. Middle East respiratory coronavirus accessory protein 4a inhibits PKR-mediated antiviral stress responses. *PLOS Pathog.* 12(10):e1005982
114. Rathnayake AD, Zheng J, Kim Y, Perera KD, Mackin S, et al. 2020. 3C-like protease inhibitors block coronavirus replication in vitro and improve survival in MERS-CoV–infected mice. *Sci. Transl. Med.* 12(557):eabc5332
115. Ren Y, Shu T, Di Wu, Mu J, Wang C, et al. 2020. The ORF3a protein of SARS-CoV-2 induces apoptosis in cells. *Cell. Mol. Immunol.* 17:881–83
116. Roth-Cross JK, Bender SJ, Weiss SR. 2008. Murine coronavirus mouse hepatitis virus is recognized by MDA5 and induces type I interferon in brain macrophages/microglia. *J. Virol.* 82(20):9829–38
117. Schaller T, Hirschbühl K, Burkhardt K, Braun G, Trepel M, et al. 2020. Postmortem examination of patients with COVID-19. *JAMA* 323(24):2518–20
118. Scheuplein VA, Seifried J, Malczyk AH, Miller L, Höcker L, et al. 2015. High secretion of interferons by human plasmacytoid dendritic cells upon recognition of Middle East respiratory syndrome coronavirus. *J. Virol.* 89(7):3859–69
119. Schneider WM, Chevillotte MD, Rice CM. 2014. Interferon-stimulated genes: A complex web of host defenses. *Annu. Rev. Immunol.* 32:513–45
120. Sekine T, Perez-Potti A, Rivera-Ballesteros O, Strålin K, Gorin J-B, et al. 2020. Robust T cell immunity in convalescent individuals with asymptomatic or mild COVID-19. *Cell* 183(1):158–68. **https://doi.org/10.1016/j.cell.2020.08.017**
121. Shang J, Wan Y, Luo C, Ye G, Geng Q, et al. 2020. Cell entry mechanisms of SARS-CoV-2. *PNAS* 117(21):11727–34
122. Sheahan TP, Sims AC, Graham RL, Menachery VD, Gralinski LE, et al. 2017. Broad-spectrum antiviral GS-5734 inhibits both epidemic and zoonotic coronaviruses. *Sci. Transl. Med.* 9(396):eaal3653
123. Sheahan TP, Sims AC, Zhou S, Graham RL, Pruijssers AJ, et al. 2020. An orally bioavailable broad-spectrum antiviral inhibits SARS-CoV-2 in human airway epithelial cell cultures and multiple coronaviruses in mice. *Sci. Transl. Med.* 12(541):eabb5883
124. Shi C-S, Nabar NR, Huang N-N, Kehrl JH. 2019. SARS-Coronavirus Open Reading Frame-8b triggers intracellular stress pathways and activates NLRP3 inflammasomes. *Cell Death Discov.* 5:101
125. Shi J, Wen Z, Zhong G, Yang H, Wang C, et al. 2020. Susceptibility of ferrets, cats, dogs, and other domesticated animals to SARS-coronavirus 2. *Science* 368(6494):1016–20
126. Shin D, Mukherjee R, Grewe D, Bojkova D, Baek K, et al. 2020. Papain-like protease regulates SARS-CoV-2 viral spread and innate immunity. *Nature* 587:657–62
127. Siemieniuk RA, Bartoszko JJ, Ge L, Zeraatkar D, Izcovich A, et al. 2020. Drug treatments for covid-19: living systematic review and network meta-analysis. *BMJ* 370:m2980
128. Sit THC, Brackman CJ, Ip SM, Tam KWS, Law PYT, et al. 2020. Infection of dogs with SARS-CoV-2. *Nature* 586(7831):776–78
129. Siu K-L, Yuen K-S, Castaño-Rodriguez C, Ye Z-W, Yeung M-L, et al. 2019. Severe acute respiratory syndrome coronavirus ORF3a protein activates the NLRP3 inflammasome by promoting TRAF3-dependent ubiquitination of ASC. *FASEB J.* 33(8):8865–77
130. Snijder EJ, Limpens RWAL, de Wilde AH, de Jong AWM, Zevenhoven-Dobbe JC, et al. 2020. A unifying structural and functional model of the coronavirus replication organelle: tracking down RNA synthesis. *PLOS Biol.* 18(6):e3000715
131. Sola I, Galán C, Mateos-Gómez PA, Palacio L, Zúñiga S, et al. 2011. The polypyrimidine tract-binding protein affects coronavirus RNA accumulation levels and relocalizes viral RNAs to novel cytoplasmic domains different from replication-transcription sites. *J. Virol.* 85(10):5136–49
132. Stadnytskyi V, Bax CE, Bax A, Anfinrud P. 2020. The airborne lifetime of small speech droplets and their potential importance in SARS-CoV-2 transmission. *PNAS* 117(22):11875–77

Annu. Rev. Microbiol. 2021.75:19-47. Downloaded from www.annualreviews.org
Access provided by 42.2.127.201 on 10/26/21. For personal use only.

133. Stockwell BR, Friedmann Angeli JP, Bayir H, Bush AI, Conrad M, et al. 2017. Ferroptosis: a regulated cell death nexus linking metabolism, redox biology, and disease. *Cell* 171(2):273–85
134. Swanson KV, Deng M, Ting JP-Y. 2019. The NLRP3 inflammasome: molecular activation and regulation to therapeutics. *Nat. Rev. Immunol.* 19(8):477–89
135. Tang N, Li D, Wang X, Sun Z. 2020. Abnormal coagulation parameters are associated with poor prognosis in patients with novel coronavirus pneumonia. *J. Thromb. Haemost.* 18(4):844–47
136. Tay MZ, Poh CM, Rénia L, MacAry PA, Ng LFP. 2020. The trinity of COVID-19: immunity, inflammation and intervention. *Nat. Rev. Immunol.* 20(6):363–74
137. Thoms M, Buschauer R, Ameismeier M, Koepke L, Denk T, et al. 2020. Structural basis for translational shutdown and immune evasion by the Nsp1 protein of SARS-CoV-2. *Science* 369(6508):1249–55
138. To KK-W, Hung IF-N, Ip JD, Chu AW-H, Chan W-M, et al. 2020. Coronavirus disease 2019 (COVID-19) re-infection by a phylogenetically distinct severe acute respiratory syndrome coronavirus 2 strain confirmed by whole genome sequencing. *Clin. Infect. Dis.* In press
139. Tortorici MA, Beltramello M, Lempp FA, Pinto D, Dang HV, et al. 2020. Ultrapotent human antibodies protect against SARS-CoV-2 challenge via multiple mechanisms. *Science* 370:950–57
140. Totura AL, Whitmore A, Agnihothram S, Schäfer A, Katze MG, Heise MT, Baric RS. 2015. Toll-like receptor 3 signaling via TRIF contributes to a protective innate immune response to severe acute respiratory syndrome coronavirus infection. *mBio* 6(3):e00638-15
141. Wang H, He S, Deng W, Zhang Y, Li G, et al. 2020. Comprehensive insights into the catalytic mechanism of Middle East respiratory syndrome 3C-like protease and severe acute respiratory syndrome 3C-like protease. *ACS Catal.* 10:5871–90
142. Wang Q, Vlasova AN, Kenney SP, Saif LJ. 2019. Emerging and re-emerging coronaviruses in pigs. *Curr. Opin. Virol.* 34:39–49
143. Wang Q, Wu J, Wang H, Gao Y, Liu Q, et al. 2020. Structural basis for RNA replication by the SARS-CoV-2 polymerase. *Cell* 182(2):417–28.e13
144. Wang W, Ye L, Ye L, Li B, Gao B, et al. 2007. Up-regulation of IL-6 and TNF-α induced by SARS-coronavirus spike protein in murine macrophages via NF-κB pathway. *Virus Res.* 128(1–2):1–8
145. Wang Y, Liu L. 2016. The membrane protein of severe acute respiratory syndrome coronavirus functions as a novel cytosolic pathogen-associated molecular pattern to promote beta interferon induction via a Toll-like-receptor-related TRAF3-independent mechanism. *mBio* 7(1):e01872-15
146. Wiersinga WJ, Rhodes A, Cheng AC, Peacock SJ, Prescott HC. 2020. Pathophysiology, transmission, diagnosis, and treatment of coronavirus disease 2019 (COVID-19): a review. *JAMA* 324(8):782–93
147. Wille M, Holmes EC. 2020. Wild birds as reservoirs for diverse and abundant gamma- and deltacoronaviruses. *FEMS Microbiol. Rev.* 44 (5):631–44
148. Wolff G, Limpens RWAL, Zevenhoven-Dobbe JC, Laugks U, Zheng S, et al. 2020. A molecular pore spans the double membrane of the coronavirus replication organelle. *Science* 369(6509):1395–98
149. Wong HH, Fung TS, Fang S, Huang M, Le MT, Liu DX. 2018. Accessory proteins 8b and 8ab of severe acute respiratory syndrome coronavirus suppress the interferon signaling pathway by mediating ubiquitin-dependent rapid degradation of interferon regulatory factor 3. *Virology* 515:165–75
150. Wong L-YR, Ye Z-W, Lui P-Y, Zheng X, Yuan S, et al. 2020. Middle East respiratory syndrome coronavirus ORF8b accessory protein suppresses type I IFN expression by impeding HSP70-dependent activation of IRF3 kinase IKKε. *J. Immunol.* 205(6):1564–79
151. Wu F, Zhao S, Yu B, Chen Y-M, Wang W, et al. 2020. A new coronavirus associated with human respiratory disease in China. *Nature* 579(7798):265–69
152. Xia B, Kang X. 2011. Activation and maturation of SARS-CoV main protease. *Protein Cell* 2(4):282–90
153. Xu Z, Shi L, Wang Y, Zhang J, Huang L, et al. 2020. Pathological findings of COVID-19 associated with acute respiratory distress syndrome. *Lancet Respir. Med.* 8(4):420–22
154. Xue M, Fu F, Ma Y, Zhang X, Li L, Feng L, Liu P. 2018. The PERK arm of the unfolded protein response negatively regulates transmissible gastroenteritis virus replication by suppressing protein translation and promoting type I interferon production. *J. Virol.* 92(15):e00431-18
155. Yang C, Chen Y, Guo G, Li H, Cao D, et al. 2013. Expression of B and T lymphocyte attenuator (BTLA) in macrophages contributes to the fulminant hepatitis caused by murine hepatitis virus strain-3. *Gut* 62(8):1204–13

Annu. Rev. Microbiol. 2021.75:19-47. Downloaded from www.annualreviews.org
Access provided by 42.2.127.201 on 10/26/21. For personal use only.

156. Yang D, Chu H, Hou Y, Chai Y, Shuai H, et al. 2020. Attenuated interferon and proinflammatory response in SARS-CoV-2-infected human dendritic cells is associated with viral antagonism of STAT1 phosphorylation. *J. Infect. Dis.* 222(5):734–45
157. Yeung M-L, Yao Y, Jia L, Chan JFW, Chan K-H, et al. 2016. MERS coronavirus induces apoptosis in kidney and lung by upregulating Smad7 and FGF2. *Nat. Microbiol.* 1(3):16004
158. Yin W, Mao C, Luan X, Shen D-D, Shen Q, et al. 2020. Structural basis for inhibition of the RNA-dependent RNA polymerase from SARS-CoV-2 by remdesivir. *Science* 368 (6498):1499–504
159. Yu F, Xiang R, Deng X, Wang L, Yu Z, et al. 2020. Receptor-binding domain-specific human neutralizing monoclonal antibodies against SARS-CoV and SARS-CoV-2. *Signal Transduct. Targeted Ther.* 5(1):212
159a. Yuan LX, Liang JQ, Zhu QC, Dai G, Li SM, et al. 2021. A gammacoronavirus, avian infectious bronchitis virus, and an alphacoronavirus, porcine epidemic diarrhea virus, exploit a cell survival strategy by upregulating cFOS to promote virus replication. *J. Virol.* 95(4):e02107-20
160. Yue Y, Nabar NR, Shi C-S, Kamenyeva O, Xiao X, et al. 2018. SARS-Coronavirus Open Reading Frame-3a drives multimodal necrotic cell death. *Cell Death Dis.* 9(9):904
161. Zhang Q, Bastard P, Liu Z, Le Pen J, Moncada-Velez M, et al. 2020. Inborn errors of type I IFN immunity in patients with life-threatening COVID-19. *Science* 370(6515):eabd4570
162. Zhang X, Tan Y, Ling Y, Lu G, Liu F, et al. 2020. Viral and host factors related to the clinical outcome of COVID-19. *Nature* 583(7816):437–40
163. Zhao X, Guo F, Liu F, Cuconati A, Chang J, et al. 2014. Interferon induction of IFITM proteins promotes infection by human coronavirus OC43. *PNAS* 111(18):6756–61
164. Zhou P, Yang X-L, Wang X-G, Hu B, Zhang L, et al. 2020. A pneumonia outbreak associated with a new coronavirus of probable bat origin. *Nature* 579(7798):270–73
165. Ziegler CGK, Allon SJ, Nyquist SK, Mbano IM, Miao VN, et al. 2020. SARS-CoV-2 receptor ACE2 is an interferon-stimulated gene in human airway epithelial cells and is detected in specific cell subsets across tissues. *Cell* 181(5):1016–35.e19
166. Züst R, Cervantes-Barragan L, Habjan M, Maier R, Neuman BW, et al. 2011. Ribose 2-*O*-methylation provides a molecular signature for the distinction of self and non-self mRNA dependent on the RNA sensor Mda5. *Nat. Immunol.* 12(2):137–43

Annu. Rev. Microbiol. 2021.75:19-47. Downloaded from www.annualreviews.org
Access provided by 42.2.127.201 on 10/26/21. For personal use only.

Annual Review of Microbiology
Volume 75, 2021

Contents

The History of Microbiology—A Personal Interpretation
Roberto Kolter 1

Similarities and Dissimilarities of COVID-19 and Other Coronavirus Diseases
To Sing Fung and Ding Xiang Liu 19

Culturing Human Gut Microbiomes in the Laboratory
Simone Renwick, Caroline M. Ganobis, Riley A. Elder, Connor Gianetto-Hill, Gregory Higgins, Avery V. Robinson, Sarah J. Vancuren, Jacob Wilde, and Emma Allen-Vercoe 49

Regulation of Bacterial Ribonucleases
Murray P. Deutscher 71

Plasmodium vivax Latent Liver Stage Infection and Relapse: Biological Insights and New Experimental Tools
Carola Schäfer, Gigliola Zanghi, Ashley M. Vaughan, and Stefan H.I. Kappe 87

Cell-to-Cell Heterogeneity in Trypanosomes
Vanessa Luzak, Lara López-Escobar, T. Nicolai Siegel, and Luisa M. Figueiredo 107

Beyond Restriction Modification: Epigenomic Roles of DNA Methylation in Prokaryotes
Brian P. Anton and Richard J. Roberts 129

Cell Wall Biology of *Vibrio cholerae*
Laura Alvarez, Sara B. Hernandez, and Felipe Cava 151

Antimicrobial Activity of Metals and Metalloids
Yuan Ping Li, Ibtissem Ben Fekih, Ernest Chi Fru, Aurelio Moraleda-Munoz, Xuanji Li, Barry P. Rosen, Masafumi Yoshinaga, and Christopher Rensing 175

Genome-Scale Metabolic Modeling of the Human Microbiome in the Era of Personalized Medicine
Almut Heinken, Arianna Basile, Johannes Hertel, Cyrille Thinnes, and Ines Thiele 199

Causative Microbes in Host-Microbiome Interactions
Graham J. Britton and Jeremiah J. Faith 223

Quantitative Control for Stoichiometric Protein Synthesis
James C. Taggart, Jean-Benoît Lalanne, and Gene-Wei Li 243

Annu. Rev. Microbiol. 2021.75:19-47. Downloaded from www.annualreviews.org
Access provided by 42.2.127.201 on 10/26/21. For personal use only.

Bacterial Multicellularity: The Biology of *Escherichia coli* Building Large-Scale Biofilm Communities
Diego O. Serra and Regine Hengge 269

Transcriptional Pausing as a Mediator of Bacterial Gene Regulation
Robert Landick 291

Growth and Division of the Peptidoglycan Matrix
Patricia D.A. Rohs and Thomas G. Bernhardt 315

Evolution and Physiology of Amphibious Yeasts
Fouad El Baidouri, Polona Zalar, Timothy Y. James, Amy S. Gladfelter, and Anthony S. Amend 337

Expanding Archaeal Diversity and Phylogeny: Past, Present, and Future
Guillaume Tahon, Patricia Geesink, and Thijs J.G. Ettema 359

Two P or Not Two P: Understanding Regulation by the Bacterial Second Messengers (p)ppGpp
Gert Bange, Ditlev E. Brodersen, Anastasia Liuzzi, and Wieland Steinchen 383

Imaging Infection Across Scales of Size: From Whole Animals to Single Molecules
Eric P. Skaar 407

Microbial Rhodopsins: The Last Two Decades
Andrey Rozenberg, Keiichi Inoue, Hideki Kandori, and Oded Béjà 427

Quorum Sensing in Fungal Species
Xiuyun Tian, Hao Ding, Weixin Ke, and Linqi Wang 449

The Type VII Secretion System in *Staphylococcus*
Lisa Bowman and Tracy Palmer 471

Trypanosome Signaling—Quorum Sensing
Keith R. Matthews 495

Hostile Takeover: How Viruses Reprogram Prokaryotic Metabolism
Tyler B. Jacobson, Melanie M. Callaghan, and Daniel Amador-Noguez 515

Multiscale Dynamic Structuring of Bacterial Chromosomes
Virginia S. Lioy, Ivan Junier, and Frédéric Boccard 541

Molecular Basis of Lysis–Lysogeny Decisions in Gram-Positive Phages
Aisling Brady, Alonso Felipe-Ruiz, Francisca Gallego del Sol, Alberto Marina, Nuria Quiles-Puchalt, and José R. Penadés 563

Deciphering the Chitin Code in Plant Symbiosis, Defense, and Microbial Networks
Devanshi Khokhani, Cristobal Carrera Carriel, Shivangi Vayla, Thomas B. Irving, Christina Stonoha-Arther, Nancy P. Keller, and Jean-Michel Ané 583

Annu. Rev. Microbiol. 2021.75:19-47. Downloaded from www.annualreviews.org
Access provided by 42.2.127.201 on 10/26/21. For personal use only.

Bacterial Outer Membrane Vesicles: From Discovery to Applications
Mariana G. Sartorio, Evan J. Pardue, Mario F. Feldman, and M. Florencia Haurat 609

Origin and Early Evolution of the Eukaryotic Cell
Toni Gabaldón 631

Cellular Adaptations to Cytoplasmic Mg^{2+} Limitation
Eduardo A. Groisman and Carissa Chan 649

Virulence and Pathogenicity of Chytrid Fungi Causing Amphibian Extinctions
Matthew C. Fisher, Frank Pasmans, and An Martel 673

Life in the Dark: Phylogenetic and Physiological Diversity of Chemosynthetic Symbioses
E. Maggie Sogin, Manuel Kleiner, Christian Borowski, Harald R. Gruber-Vodicka, and Nicole Dubilier 695

The Bacterial Hsp90 Chaperone: Cellular Functions and Mechanism of Action
Sue Wickner, Thu-Lan Lily Nguyen, and Olivier Genest 719

Indexes

Cumulative Index of Contributing Authors, Volumes 71–75 741

Errata

An online log of corrections to *Annual Review of Microbiology* articles may be found at http://www.annualreviews.org/errata/micro

Annu. Rev. Microbiol. 2021.75:19-47. Downloaded from www.annualreviews.org
Access provided by 42.2.127.201 on 10/26/21. For personal use only.